TMCM-1231 CANopen® Firmware Manual

Firmware Version V3.25 | Document Revision V1.00 • 2020-AUG-25

The TMCM-1231 is a single axis controller/driver module for 2-phase bipolar stepper motors. The TMCM-1231 CANopen firmware allows to control the module using the CANopen® protocol, supporting standalone operation as well as direct mode control, making use of the Trinamic TMC4361 motion controller and TMC5160 motor driver. Dynamic current control, and quiet, smooth and efficient operation are combined with StealthChop™, DcStep™, StallGuard2™ and CoolStep™ features.

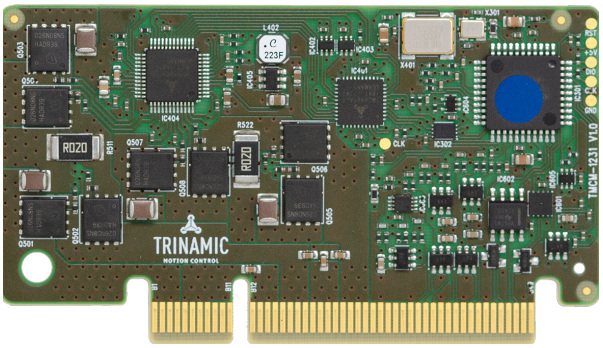

Features

- Single Axis Stepper motor control
- Supply voltage 24V DC
- TMCL™
- Host interfaces: RS485, CAN
- Step/Direction inputs
- Additional inputs and outputs
- SixPoint™ ramps
- S-shaped ramps
- CoolStep™
- StallGuard2™
- StealthChop™
- External (ABN) encoder interface

Applications

- Laboratory Automation
- Manufacturing
- Semiconductor Handling
- Robotics
- Factory Automation
- Test & Measurement
- Life Science
- Biotechnology
- Liquid Handling

Simplified Block Diagram

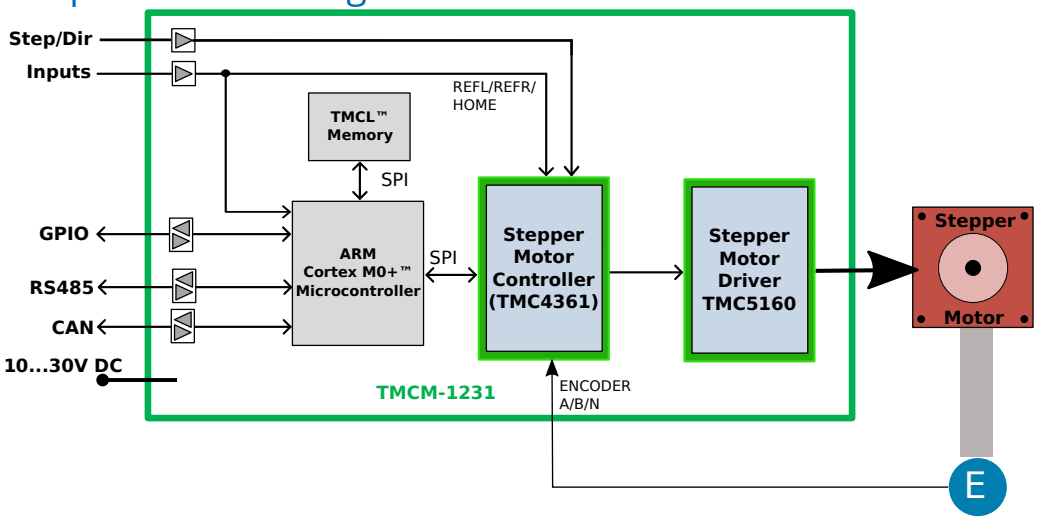

©2020 TRINAMIC Motion Control GmbH & Co. KG, Hamburg, Germany
Terms of delivery and rights to technical change reserved.
Download newest version at: www.trinamic.com

Read entire documentation.

TRINAMIC
MOTION CONTROL
Now part of Maxim Integrated

Contents

1 Preface 6
- 1.1 General Features of this CANopen Implementation . . . 6
- 1.2 Abbreviations used in this Manual . . . 7
- 1.3 Firmware Update . . . 7
- 1.4 Trinamic's unique Features — easy to use with CANopen . . . 8
  - 1.4.1 stallGuard2 . . . 8
  - 1.4.2 coolStep . . . 8

2 Communication 10
- 2.1 Reference Model . . . 10
- 2.2 NMT State Machine . . . 12
- 2.3 Device Model . . . 13
- 2.4 Object Dictionary . . . 14

3 Communication Area 16
- 3.1 Detailed Object Specifications . . . 16
  - 3.1.1 Object 1000_h: Device Type . . . 16
  - 3.1.2 Object 1001_h: Error Register . . . 16
  - 3.1.3 Object 1005_h: COB-ID SYNC Message . . . 17
  - 3.1.4 Object 1008_h: Manufacturer Device Name . . . 18
  - 3.1.5 Object 1009_h: Manufacturer Hardware Version . . . 18
  - 3.1.6 Object $100A_h$: Manufacturer Software Version . . . 18
  - 3.1.7 Object $100C_h$: Guard Time . . . 19
  - 3.1.8 Object $100D_h$: Life Time Factor . . . 19
  - 3.1.9 Object 1010_h: Store Parameters . . . 19
  - 3.1.10 Object 1011_h: Restore Parameters . . . 21
  - 3.1.11 Object 1014_h: COB-ID Emergency Object . . . 22
  - 3.1.12 Object 1015_h: Inhibit Time EMCY . . . 22
  - 3.1.13 Object 1016_h: Consumer Heartbeat Time . . . 23
  - 3.1.14 Object 1017_h: Producer Heartbeat Time . . . 23
  - 3.1.15 Object 1018_h: Identity Object . . . 24
  - 3.1.16 Object 1029_h: Error Behaviour . . . 24
  - 3.1.17 Objects 1400_h – 1403_h: Receive PDO Communication Parameter . . . 25
  - 3.1.18 Objects 1600_h – 1603_h: Receive PDO Mapping Parameter . . . 26
  - 3.1.19 Objects 1800_h – 1803_h: Transmit PDO Communication Parameter . . . 27
  - 3.1.20 Objects $1A00_h$ – $1A03_h$: Transmit PDO Mapping Parameter . . . 28

4 Manufacturer specific Area 30
- 4.1 Objects related to CoolStep™ . . . 30
- 4.2 Detailed Object Specifications . . . 32
  - 4.2.1 Object 2000_h: Microstep Resolution . . . 32
  - 4.2.2 Object 2001_h: Fullstep Resolution . . . 32
  - 4.2.3 Object 2002_h: Brake Delay Times . . . 32
  - 4.2.4 Object 2003_h: Maximum Current . . . 33
  - 4.2.5 Object 2004_h: Standby Current . . . 34
  - 4.2.6 Object 2005_h: Limit Switches . . . 34
  - 4.2.7 Object $200A_h$: Enable Drive Delay Time . . . 35
  - 4.2.8 Object $200B_h$: Encoder Parameters . . . 35
  - 4.2.9 Object $200C_h$: Brake Current Feed . . . 36
  - 4.2.10 Object $200F_h$: Encoder N Channel Latch . . . 36
  - 4.2.11 Object 2010_h: Profile Start Velocity . . . 37

©2020 TRINAMIC Motion Control GmbH & Co. KG, Hamburg, Germany
Terms of delivery and rights to technical change reserved.
Download newest version at www.trinamic.com

4.2.12 Object 2011_h: Profile Start Acceleration . . . 37
4.2.13 Object 2012_h: Profile Break Velocity . . . 38
4.2.14 Object 2013_h: Profile Final Deceleration . . . 38
4.2.15 Object 2014_h: Profile Stop Deceleration . . . 38
4.2.16 Object 2015_h: Bow Scaling Factor . . . 39
4.2.17 Object $204E_h$: Boost Current . . . 39
4.2.18 Object 2089_h: Setting Delay . . . 40
4.2.19 Object $208C_h$: Velocity Dimension Index . . . 40
4.2.20 Object $208E_h$: Acceleration Dimension Index . . . 40
4.2.21 Object 2092_h: Chopper Blank Time . . . 41
4.2.22 Object 2093_h: Chopper Mode . . . 41
4.2.23 Object 2094_h: Chopper Hysteresis Decrement . . . 42
4.2.24 Object 2095_h: Chopper Hysteresis End . . . 42
4.2.25 Object 2096_h: Chopper Hysteresis Start . . . 43
4.2.26 Object 2097_h: Chopper Off Time . . . 43
4.2.27 Object 2098_h: Smart Energy Current Minimum . . . 44
4.2.28 Object 2099_h: Smart Energy Current Down Step . . . 44
4.2.29 Object $209A_h$: Smart Energy Hysteresis . . . 45
4.2.30 Object $209B_h$: Smart Energy Current Up Step . . . 45
4.2.31 Object $209C_h$: Smart Energy Hysteresis Start . . . 46
4.2.32 Object $209D_h$: Smart Energy Filter Enable . . . 46
4.2.33 Object $209E_h$: StallGuard2 Threshold . . . 46
4.2.34 Object $20A1_h$: Short Protection Disable . . . 47
4.2.35 Object $20A4_h$: Stop on Stall . . . 47
4.2.36 Object $20A5_h$: Smart Energy Threshold Speed . . . 48
4.2.37 Object $20B0_h$: PWM Threshold Speed . . . 48
4.2.38 Object $20B1_h$: PWM Gradient . . . 49
4.2.39 Object $20B2_h$: PWM Amplitude . . . 49
4.2.40 Object 2100_h: Home Offset Display . . . 50
4.2.41 Object 2101_h: Actual Load Value . . . 50
4.2.42 Object 2102_h: Driver Error Flags . . . 50
4.2.43 Object 2107_h: Microstep Resolution Display . . . 51
4.2.44 Object 2700_h: TMCL Direct Communication . . . 52
4.2.45 Object 2701_h: Manufacturer Specific Mode . . . 52
4.2.46 Object 2702_h: Device Digital Inputs . . . 53
4.2.47 Object 2703_h: Device Digital Outputs . . . 53
4.2.48 Object 2704_h: CAN Bit Rate . . . 54
4.2.49 Object 2705_h: Node ID . . . 55
4.2.50 Object 2706_h: Store . . . 55
4.2.51 Object 2707_h: CAN Bit Rate Load . . . 56
4.2.52 Object 2708_h: Node ID Load . . . 56
4.2.53 Object $270E_h$: Device Analog Inputs . . . 57
4.2.54 Object $5FFF_h$: Bootloader mode . . . 57

5 Profile specific Area **58**
5.1 Detailed Object Specifications . . . 58
5.1.1 Object $605A_h$: Quick Stop Option Code . . . 58
5.1.2 Object $605B_h$: Shutdown Option Code . . . 59
5.1.3 Object $605C_h$: Disable Operation Option Code . . . 59
5.1.4 Object $605D_h$: Halt Option Code . . . 60
5.1.5 Object $605E_h$: Fault Reaction Option Code . . . 60
5.1.6 Object 6060_h: Modes of Operation . . . 61
5.1.7 Object 6061_h: Modes of Operation Display . . . 62
5.1.8 Object $606A_h$: Sensor Selection Code . . . 63

©2020 TRINAMIC Motion Control GmbH & Co. KG, Hamburg, Germany
Terms of delivery and rights to technical change reserved.
Download newest version at www.trinamic.com

5.1.9 Object $608F_h$: Position Encoder Resolution . . . 63
5.1.10 Object $60FD_h$: Digital Inputs . . . 64
5.1.11 Object 6502_h: Supported Drive Modes . . . 64

6 Profile Position Mode **66**
6.1 Detailed Object Specifications . . . 66
6.1.1 Object 6040_h: Control Word . . . 67
6.1.2 Object 6041_h: Status Word . . . 68
6.1.3 Object 6062_h: Position Demand Value . . . 69
6.1.4 Object 6063_h: Position Actual Internal Value . . . 70
6.1.5 Object 6064_h: Position Actual Value . . . 70
6.1.6 Object 6065_h: Following Error Window . . . 71
6.1.7 Object 6067_h: Position Window . . . 71
6.1.8 Object 6068_h: Position Window Time . . . 72
6.1.9 Object $606C_h$: Velocity Actual Value . . . 72
6.1.10 Object $607A_h$: Target Position . . . 73
6.1.11 Object $607D_h$: Software Position Limit . . . 73
6.1.12 Object 6081_h: Profile Velocity . . . 74
6.1.13 Object 6082_h: End Velocity . . . 74
6.1.14 Object 6083_h: Profile Acceleration . . . 75
6.1.15 Object 6084_h: Profile Deceleration . . . 75
6.1.16 Object 6085_h: Quick Stop Deceleration . . . 75
6.1.17 Object 6086_h: Motion Profile Type . . . 76
6.1.18 Object $60A4_h$: Profile Jerk . . . 76
6.1.19 Object $60F2_h$: Positioning Option Code . . . 77
6.2 How to move a Motor in pp Mode . . . 78

7 Profile Velocity Mode **79**
7.1 Detailed Object Specifications . . . 79
7.1.1 Object 6040_h: Control Word . . . 79
7.1.2 Object 6041_h: Status Word . . . 80
7.1.3 Object 6062_h: Position Demand Value . . . 82
7.1.4 Object 6063_h: Position Actual Internal Value . . . 82
7.1.5 Object 6064_h: Position Actual Value . . . 83
7.1.6 Object 6065_h: Following Error Window . . . 83
7.1.7 Object $606C_h$: Velocity Actual Value . . . 84
7.1.8 Object $607D_h$: Software Position Limit . . . 84
7.1.9 Object 6083_h: Profile Acceleration . . . 85
7.1.10 Object 6084_h: Profile Deceleration . . . 85
7.1.11 Object 6085_h: Quick Stop Deceleration . . . 85
7.1.12 Object 6086_h: Motion Profile Type . . . 86
7.1.13 Object $60A4_h$: Profile Jerk . . . 86
7.1.14 Object $60FF_h$: Target Velocity . . . 87
7.2 How to move a Motor in pv Mode . . . 88

8 Homing Mode **89**
8.1 Homing Methods . . . 90
8.1.1 Homing Method 1: Homing on negative Limit Switch and Index Pulse . . . 90
8.1.2 Homing Method 2: Homing on positive Limit Switch and Index Pulse . . . 91
8.1.3 Homing Method 3: Homing on positive Home Switch and Index Pulse . . . 91
8.1.4 Homing Method 5: Homing on negative Home Switch and Index Pulse . . . 91
8.1.5 Homing Method 17: Homing on negative Limit Switch . . . 92
8.1.6 Homing Method 18: Homing on positive Limit Switch . . . 92
8.1.7 Homing Method 19: Homing on positive Home Switch . . . 93

©2020 TRINAMIC Motion Control GmbH & Co. KG, Hamburg, Germany
Terms of delivery and rights to technical change reserved.
Download newest version at www.trinamic.com

8.1.8 Homing Method 21: Homing on negative Home Switch . . . 93
8.1.9 Homing Method 33 and 34: Homing on next Index Pulse . . . 93
8.1.10 Homing Method 35: Current Position as Home Position . . . 94
8.2 Detailed Object Specifications . . . 95
8.2.1 Object 6040_h: Control Word . . . 95
8.2.2 Object 6041_h: Status Word . . . 96
8.2.3 Object $606C_h$: Velocity Actual Value . . . 97
8.2.4 Object $607C_h$: Home Offset . . . 98
8.2.5 Object 6098_h: Homing Method . . . 99
8.2.6 Object 6099_h: Homing Speeds . . . 99
8.2.7 Object $609A_h$: Homing Acceleration . . . 99
8.3 How to start a Homing in hm Mode . . . 100

9 Cyclic synchronous Position Mode 101
9.1 Detailed Object Specifications . . . 101
9.1.1 Object 6040_h: Control Word . . . 101
9.1.2 Object 6041_h: Status Word . . . 102
9.1.3 Object 6062_h: Position Demand Value . . . 104
9.1.4 Object 6063_h: Position Actual Internal Value . . . 104
9.1.5 Object 6064_h: Position Actual Value . . . 105
9.1.6 Object $606C_h$: Velocity Actual Value . . . 105
9.1.7 Object $607A_h$: Target Position . . . 105
9.1.8 Object $607D_h$: Software Position Limit . . . 106
9.1.9 Object $60B0_h$: Position Offset . . . 106
9.1.10 Object $60C2_h$: Interpolation Time Period . . . 107

10 Cyclic synchronous Velocity Mode 108
10.1 Detailed Object Specifications . . . 108
10.1.1 Object 6040_h: Control Word . . . 108
10.1.2 Object 6041_h: Status Word . . . 109
10.1.3 Object $606C_h$: Velocity Actual Value . . . 111
10.1.4 Object $60FF_h$: Target Velocity . . . 111
10.1.5 Object $607D_h$: Software Position Limit . . . 111
10.1.6 Object $60B1_h$: Velocity Offset . . . 112
10.1.7 Object $60C2_h$: Interpolation Time Period . . . 112

11 Emergency Messages (EMCY) 114

12 Figures Index 117

13 Tables Index 118

14 Supplemental Directives 122
14.1 Producer Information . . . 122
14.2 Copyright . . . 122
14.3 Trademark Designations and Symbols . . . 122
14.4 Target User . . . 122
14.5 Disclaimer: Life Support Systems . . . 122
14.6 Disclaimer: Intended Use . . . 122
14.7 Collateral Documents & Tools . . . 123

15 Revision History 124
15.1 Firmware Revision . . . 124
15.2 Document Revision . . . 124

©2020 TRINAMIC Motion Control GmbH & Co. KG, Hamburg, Germany
Terms of delivery and rights to technical change reserved.
Download newest version at www.trinamic.com

1 Preface

This document specifies objects and modes of operation of the Trinamic TMCM-1231 stepper motor control module with CANopen firmware. The CANopen firmware is designed to fulfill the CANopen DS402 and DS301 standards. This manual assumes that the reader is already familiar with the basics of the CANopen protocol, defined by the DS301 and DS402 standards of the CAN-CiA.

If necessary, it is always possible to turn the TMCM-1231 into a TMCL module by loading the TMCM-1231 TMCL firmware again with the help of the firmware update function of the TMCL-IDE 3.0. First switch to the bootloader as described in Section 1.3 and then load the desired file.

1.1 General Features of this CANopen Implementation

Main Characteristics

- Communication according to standard CiA-301 V4.1
- CAN bit rate: 20…1000kBit/s
- CAN ID: 11 bit
- Node ID: 1…127 (use vendor specific objects for changing the node ID)
- NMT services: NMT slave

SDO Communication

- 1 server
- Expedited transfer
- Segmented transfer
- No block transfer

PDO Communication

- Producer
- Consumer
- RPDOs
  - Axis 0: 1, 2, 3, 4
  - Transmission modes: asynchronous.
  - Dynamic mapping with max. 3 mapping entries.
  - Default mappings: according to CiA-402 for first three PDOs of each axis, manufacturer specific for other PDOs of each axis.
- TPDOs
  - Axis 0: 1, 2, 3, 4
  - Transmission modes: asynchronous, asynchronous with event timer, synchronous.
  - Dynamic mapping with max. 3 mapping entries.
  - Default mappings: according to CiA-402 for first three PDOs of each axis, manufacturer specific for other PDOs of each axis.

©2020 TRINAMIC Motion Control GmbH & Co. KG, Hamburg, Germany
Terms of delivery and rights to technical change reserved.
Download newest version at www.trinamic.com

Further Characteristics

- SYNC: consumer (TPDOs 3 are synchronous PDOs)
- Emergency: producer
- RTR: supported only for node guarding/life guarding
- Heartbeat: consumer and producer

1.2 Abbreviations used in this Manual

Abbreviations	
CAN	Controller area network
CHGND	chassis ground / earth ground
COB	Communication object
FSA	Finite state automaton
FSM	Finite state machine
NMT	Network management
ID	Identifier
LSB	Least significant bit
MSB	Most significant bit
PDO	Process data object
PDS	Power drive system
RPDO	Receive process data object
SDO	Service data object
TPDO	Transmit process data object
EMCY	Emergency object
rw	Read and write
ro	Read only
hm	Homing mode
pp	Profile position mode
pv	Profile velocity mode
vm	Velocity mode

Table 1: Abbreviations used in this Manual

1.3 Firmware Update

The software running on the microprocessor consists of two parts, a bootloader and the CANopen firmware itself. Whereas the bootloader is installed during production and testing at TRINAMIC and remains untouched throughout the whole lifetime, the CANopen firmware can easily be updated by the user. The new firmware can be loaded into the module via the firmware update function of the TMCL-IDE, using the

©2020 TRINAMIC Motion Control GmbH & Co. KG, Hamburg, Germany
Terms of delivery and rights to technical change reserved.
Download newest version at www.trinamic.com

CAN interface of the module.

To reset the module to bootloader mode, write the hex number 12345678_h to object $5FFF_h$. Both LEDs of the TMCM-1231 will turn on and remain lighting. Now the new firmware can be uploaded using the Firmware Update Tool of the TMCL-IDE 3.0.

1.4 Trinamic's unique Features — easy to use with CANopen

1.4.1 stallGuard2

stallGuard2 is a high-precision sensorless load measurement using the back EMF of the coils. It can be used for stall detection as well as other uses at loads below those which stall the motor. The stallGuard2 measurement value changes linearly over a wide range of load, velocity, and current settings. At maximum motor load, the value reaches zero or is near zero. This is the most energy-efficient point of operation for the motor.

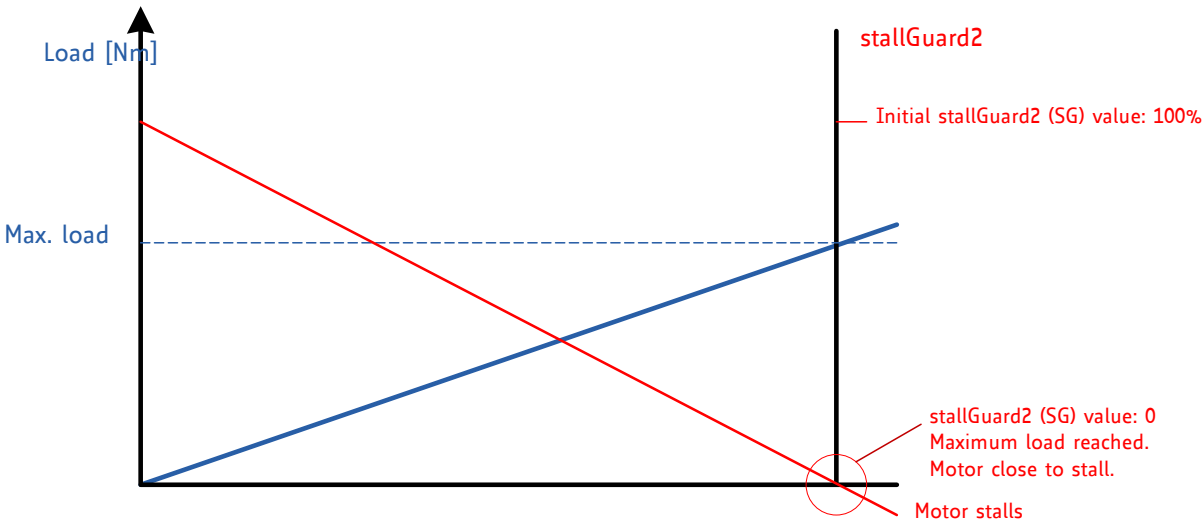

Figure 1: stallGuard2 Load Measurement as a Function of Load

1.4.2 coolStep

coolStep is a load-adaptive automatic current scaling based on the load measurement via stallGuard2 adapting the required current to the load. Energy consumption can be reduced by as much as 75%. coolStep allows substantial energy savings, especially for motors which see varying loads or operate at a high duty cycle. Because a stepper motor application needs to work with a torque reserve of 30% to 50%, even a constant-load application allows significant energy savings because coolStep automatically enables torque reserve when required. Reducing power consumption keeps the ystem cooler, increases motor life, and allows cost reduction.

©2020 TRINAMIC Motion Control GmbH & Co. KG, Hamburg, Germany
Terms of delivery and rights to technical change reserved.
Download newest version at www.trinamic.com

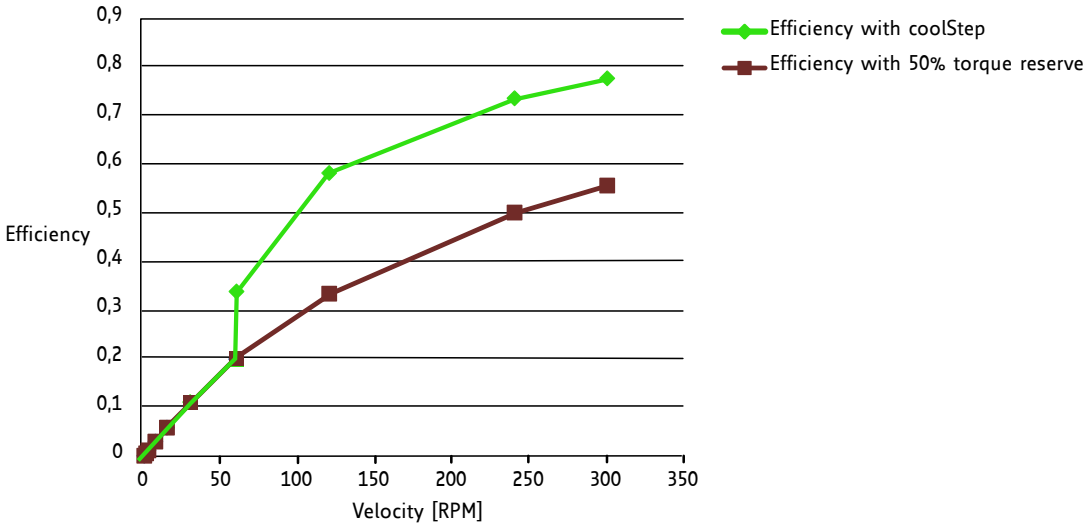

Figure 2: Energy Efficiency Example with coolStep

©2020 TRINAMIC Motion Control GmbH & Co. KG, Hamburg, Germany
Terms of delivery and rights to technical change reserved.
Download newest version at www.trinamic.com

2 Communication

2.1 Reference Model

The application layer comprises a concept to configure and communicate real-time-data as well as the mechanisms for synchronization between devices. The functionality which the application layer offers to an application is logically divided over different service data objects (SDO) in the application layer. A service object offers a specific functionality and all the related services.

Applications interact by invoking services of a service object in the application layer. To realize these services this object exchanges data via the CAN Network with peer service object(s) using a protocol.

The application and the application layer interact with service primitives.

Service Primitives	
Primitive	Definition
Request	Issued by the application to the application layer to request a service.
Indication	Issued by the application layer to the application to report an internal event detected by the application layer or indicate that a service is requested.
Response	Issued by the application to the application layer to respond to a previous received indication.
Confirmation	Issued by the application layer to the application to report the result of a previously issued request.

Table 2: Service Primitives

A service type defines the primitives that are exchanged between the application layer and the cooperating applications for a particular service of a service object. Unconfirmed and confirmed services are collectively called remote services.

©2020 TRINAMIC Motion Control GmbH & Co. KG, Hamburg, Germany
Terms of delivery and rights to technical change reserved.
Download newest version at www.trinamic.com

Service Types	
Type	Definition
Local service	Involves only the local service object. The application issues a request to its local service object that executes the requested service without communicating with peer service object(s).
Unconfirmed service	Involves one or more peer service objects. The application issues a request to its local service object. This request is transferred to the peer service object(s) that each passes it to their application as an indication. The result is not confirmed back.
Confirmed service	Can involve only one peer service object. The application issues a request to its local service object. This request is transferred to the peer service object that passes it to the other application as an indication. The other application issues a response that is transferred to the originating service object that passes it as a confirmation to the requesting application.
Provider initiated service	Involves only the local service object. The service object (being the service provider) detects an event not solicited by a requested service. This event is then indicated to the application.

Table 3: Service Types

©2020 TRINAMIC Motion Control GmbH & Co. KG, Hamburg, Germany
Terms of delivery and rights to technical change reserved.
Download newest version at www.trinamic.com

2.2 NMT State Machine

The finite state machine (FSM) or simply state machine is a model of behavior composed of a finite number of states, transitions between those states, and actions. It shows which way the logic runs when certain conditions are met.

Starting and resetting the device is controlled via the state machine. The NMT state machine consists of the states shown in figure 3.

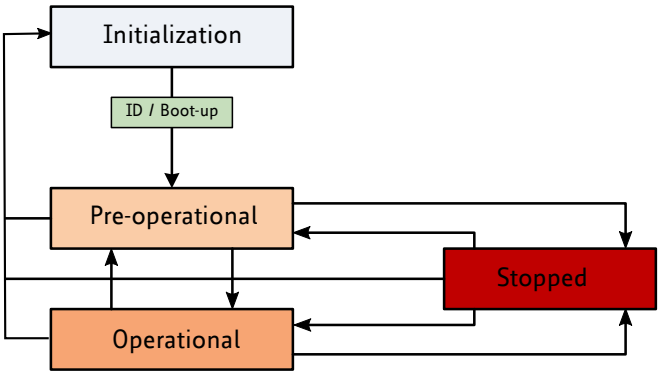

Figure 3: NMT State Machine

After power-on or reset the device enters the Initialization state. After the device initialization is finished, the device automatically transits to the **Pre-operational** state and indicates this state transition by sending the boot-up message. This way the device indicates that it is ready to work. A device that stays in Pre-operational state may start to transmit SYNC-, time stamp- or heartbeat message. In contrast to the PDO communication that is disabled in this state, the device can communicate via SDO.

The PDO communication is only possible within the **Operational** state. During Operational state the device can use all supported communication objects.

A device that was switched to the **Stopped** state only reacts on received NMT commands. In addition the device indicates the current NMT state by supporting the error control protocol during Stopped state.

The transitions between states are made by issuing a network management (NMT) communication object to the device. The NMT protocols are used to generate state machine change commands (e.g. to start and stop the device), detect remote device boot-ups and error conditions.

The Heartbeat message of a CANopen device contains the device status of the NMT state machine and is sent cyclically by the CANopen device.

The NMT state machine (or DS301 state machine) is not to be confused with the DS402 state machine. There is only one NMT state machine for the entire device, but for each motor there is a DS402 state machine which controls the motor. There are no links between these state machines, with one exception: When the NMT state machine is being switched to the stopped state, all DS402 state machines that are in OPERATION_ENABLED state will be switch to FAULT state.

©2020 TRINAMIC Motion Control GmbH & Co. KG, Hamburg, Germany
Terms of delivery and rights to technical change reserved.
Download newest version at www.trinamic.com

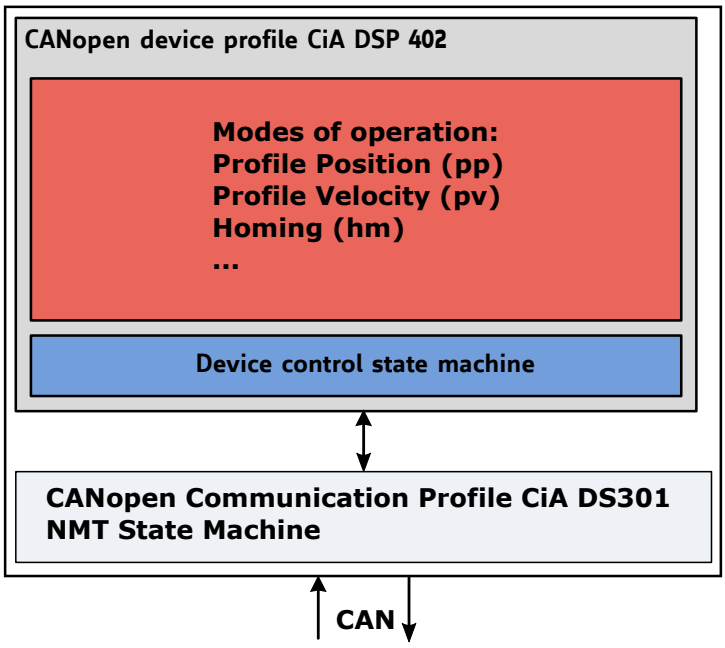

Figure 4: Communication Architecture

2.3 Device Model

A CANopen device mainly consists of the following parts:

- *Communication:* This function unit provides the communication objects and the appropriate functionality to transport data items via the underlying network structure.
- *Object dictionary:* The object dictionary is a collection of all the data items which have an influence on the behavior of the application objects, the communication objects and the state machine used on this device.
- *Application:* The application comprises the functionality of the device with respect to the interaction with the process environment.

©2020 TRINAMIC Motion Control GmbH & Co. KG, Hamburg, Germany
Terms of delivery and rights to technical change reserved.
Download newest version at www.trinamic.com

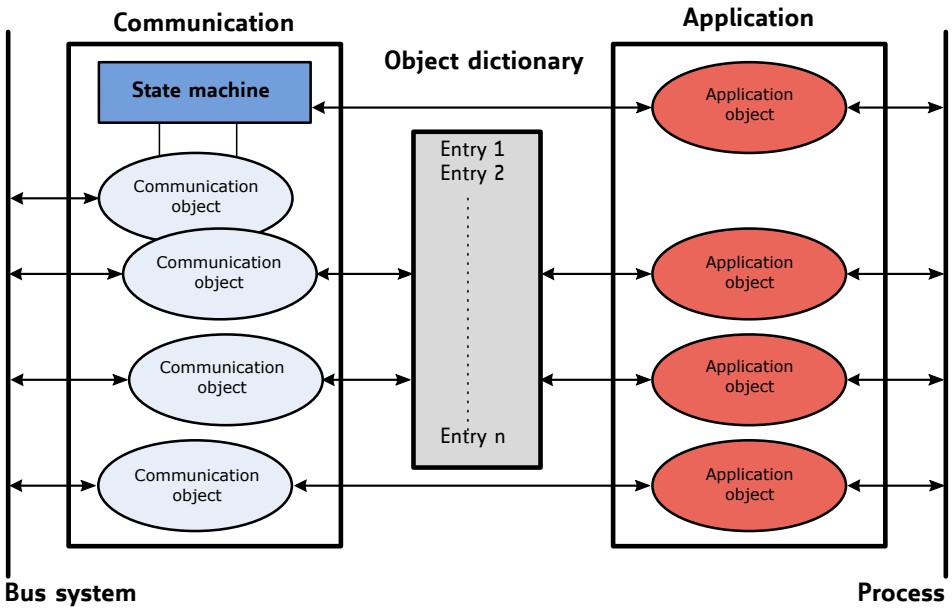

Figure 5: Device Model

2.4 Object Dictionary

The most important part of a device profile is the object dictionary description. The object dictionary is essentially a grouping of objects accessible via the network in an ordered pre-defined fashion. Each object within the dictionary is addressed using a 16-bit index. The overall layout of the standard object dictionary is shown in table 4:

Object Dictionary	
Index	Object
0000_h	Not used.
0001_h – $001F_h$	Static data types.
0020_h – $003F_h$	Complex data types.
0040_h – $005F_h$	Manufacturer specific complex data types.
0060_h – $007F_h$	Device profile specific static data types.
0080_h – $009F_h$	Device profile specific complex data types.
$00A0_h$ – $0FFF_h$	Reserved for further use.
1000_h – $1FFF_h$	Communication profile area.
2000_h – $5FFF_h$	Manufacturer specific profile area.
6000_h – $9FFF_h$	Standardized device profile area.
$A000_h$ – $BFFF_h$	Standardized interface profile area.
$C000_h$ – $FFFF_h$	Reserved for further use.

Table 4: Object Dictionary

©2020 TRINAMIC Motion Control GmbH & Co. KG, Hamburg, Germany
Terms of delivery and rights to technical change reserved.
Download newest version at www.trinamic.com

The communication profile area at indices 1000_h through $1FFF_h$ contains the communication specific parameters for the CAN network. These entries are common to all devices.

The manufacturer segment at indices 2000_h through $5FFF_h$ contains manufacturer specific objects. These objects control the special features of the Trinamic TMCM-1231 motion control device.

The standardized device profile area at indices 6000_h through $9FFF_h$ contains all data objects common to a class of devices that can be read or written via the network. They describe the device parameters and the device functionality of the device profile.

©2020 TRINAMIC Motion Control GmbH & Co. KG, Hamburg, Germany
Terms of delivery and rights to technical change reserved.
Download newest version at www.trinamic.com

3 Communication Area

The communication area contains all objects that define the communication parameters of the CANopen device according to the DS301 standard.

3.1 Detailed Object Specifications

3.1.1 Object 1000_h: Device Type

This object contains information about the device type. The object 1000_h describes the type of device and its functionality. It is composed of a 16-bit field which describes the device profile that is used and a second 16-bit field which provides additional information about optional functionality of the device.

Object Description			
Index	Name	Object Type	Data Type
1000_h	Device type	Variable	UNSIGNED32

Table 5: Object Description (1000_h)

Entry Description				
Sub-index	Access	PDO Mapping	Value Range	Default Value
0	ro	no	UNSIGNED32	$FFFC0192_h$

Table 6: Entry Description (1000_h)

3.1.2 Object 1001_h: Error Register

This object contains error information. The CANopen device maps internal errors into object 1001_h. It is part of an emergency object.

Object Description			
Index	Name	Object Type	Data Type
1001_h	Error register	Variable	UNSIGNED8

Table 7: Object Description (1001_h)

Entry Description				
Sub-index	Access	PDO Mapping	Value Range	Default Value
0	ro	no	UNSIGNED8	0

Table 8: Entry Description (1001_h)

©2020 TRINAMIC Motion Control GmbH & Co. KG, Hamburg, Germany
Terms of delivery and rights to technical change reserved.
Download newest version at www.trinamic.com

Error Register Bits	
Bit	Definition
0	Generic error
1	Current
2	Voltage
3	Temperature
4	Communication error
5	Device profile specific
6	Reserved (always 0)
7	Manufacturer specific

Table 9: Error Register Bits

3.1.3 Object 1005_h: COB-ID SYNC Message

This object defines the COB-ID of the synchronization object (SYNC). Further, it defines whether the module generates the SYNC.

Value Definition		
Bit	Name	Definition
30	Generate	0: Device does not generate SYNC message 1: Device generates SYNC message
29	Frame	Not supported, always set to 0.
28…11	29 bit ID	Not supported, always set to 0.
10…0	11 bit ID	11 bit COB-ID.

Table 10: Value Definition (1005_h)

Object Description			
Index	Name	Object Type	Data Type
1005_h	COB-ID SYNC message	Variable	UNSIGNED32

Table 11: Object Description (1005_h)

Entry Description				
Sub-index	Access	PDO Mapping	Value Range	Default Value
0	rw	no	UNSIGNED32	80_h

Table 12: Entry Description (1005_h)

©2020 TRINAMIC Motion Control GmbH & Co. KG, Hamburg, Germany
Terms of delivery and rights to technical change reserved.
Download newest version at www.trinamic.com

3.1.4 Object 1008_h: Manufacturer Device Name

This object contains the name of the device as given by the manufacturer.

Object Description			
Index	Name	Object Type	Data Type
1008_h	Manufacturer Device Name	Variable	Visible String

Table 13: Object Description (1008_h)

Entry Description				
Sub-index	Access	PDO Mapping	Value Range	Default Value
0	ro	no	—	TMCM-1231

Table 14: Entry Description (1008_h)

3.1.5 Object 1009_h: Manufacturer Hardware Version

This object contains the hardware version description.

Object Description			
Index	Name	Object Type	Data Type
1009_h	Manufacturer Hardware Version	Variable	Visible String

Table 15: Object Description (1009_h)

Entry Description				
Sub-index	Access	PDO Mapping	Value Range	Default Value
0	ro	no	—	Depends on device, e.g. 1.0.

Table 16: Entry Description (1009_h)

3.1.6 Object $100A_h$: Manufacturer Software Version

This object contains the software version description.

Object Description			
Index	Name	Object Type	Data Type
$100A_h$	Manufacturer Software Version	Variable	Visible String

Table 17: Object Description ($100A_h$)

©2020 TRINAMIC Motion Control GmbH & Co. KG, Hamburg, Germany
Terms of delivery and rights to technical change reserved.
Download newest version at www.trinamic.com

Entry Description				
Sub-index	Access	PDO Mapping	Value Range	Default Value
0	ro	no	—	Depends on device, e.g. 1.0.

Table 18: Entry Description ($100A_h$)

3.1.7 Object $100C_h$: Guard Time

The objects at index $100C_h$ and $100D_h$ shall indicate the configured guard time respectively the life time factor. The life time factor multiplied with the guard time gives the life time for the life guarding protocol.

Object Description			
Index	Name	Object Type	Data Type
$100C_h$	Guard Time	Variable	UNSIGNED16

Table 19: Object Description ($100C_h$)

Entry Description				
Sub-index	Access	PDO Mapping	Value Range	Default Value
0	rw	no	UNSIGNED16	0

Table 20: Entry Description ($100C_h$)

3.1.8 Object $100D_h$: Life Time Factor

The life time factor multiplied with the guard time gives the life time for the life guarding protocol.

Object Description			
Index	Name	Object Type	Data Type
$100D_h$	Life Time Factor	Variable	UNSIGNED8

Table 21: Object Description ($100D_h$)

Entry Description				
Sub-index	Access	PDO Mapping	Value Range	Default Value
0	rw	no	UNSIGNED8	0

Table 22: Entry Description ($100D_h$)

3.1.9 Object 1010_h: Store Parameters

This object supports the saving of parameters in non volatile memory. By read access the device provides information about its saving capabilities.

©2020 TRINAMIC Motion Control GmbH & Co. KG, Hamburg, Germany
Terms of delivery and rights to technical change reserved.
Download newest version at www.trinamic.com

There are several parameter groups:

- Sub-index 0_h: contains the largest sub-index that is supported.
- Sub-index 1_h: saves all parameters.
- Sub-index 2_h: saves communication parameters 2704_h and 2705_h.
- Sub-index 3_h: saves device profile parameters.
- Sub-index 4_h: saves motor 0 parameters.

Note In order to avoid storage of parameters by mistake, storage is only executed when a specific signature is written to the appropriate sub-Index. This signature is "save" (65766173_h, see also table 23).

Save Signature			
e	v	a	s
65_h	76_h	61_h	73_h

Table 23: Save Signature

On reception of the correct signature in the appropriate sub-index the device stores the parameter and then confirms the SDO transmission (initiate download response). If the storing failed, the device responds with an abort SDO transfer (abort code: 06060000_h). If a wrong signature is written, the device refuses to store and responds with abort SDO transfer (abort code: $0800002x_h$).

On read access, each sub-index provides information if it is possible to store the parameter group. It reads 1 if yes and 0 if no.

Object Description			
Index	Name	Object Type	Data Type
1010_h	Store Parameters	Array	UNSIGNED32

Table 24: Object Description (1010_h)

Entry Description					
Sub-index	Description	Access	PDO Mapping	Value Range	Default Value
01h	Save all parameters	rw	no	UNSIGNED32	—
02h	Save communication parameters	rw	no	UNSIGNED32	—
03h	Save device profile parameters	rw	no	UNSIGNED32	—
04h	Save motor axis 0 parameters	rw	no	UNSIGNED32	—

Table 25: Entry Description (1010_h)

©2020 TRINAMIC Motion Control GmbH & Co. KG, Hamburg, Germany
Terms of delivery and rights to technical change reserved.
Download newest version at www.trinamic.com

3.1.10 Object 1011_h: Restore Parameters

With this object the default values of parameters according to the communication or device profile are restored. By read access the device provides information about its capabilities to restore these values.

There are several parameter groups:

- Sub-index 0_h: contains the largest sub-index that is supported.
- Sub-index 1_h: restores all parameters (factory reset).
- Sub-index 2_h: restores communication parameters 2704_h and 2705_h.
- Sub-index 3_h: restores device profile parameters.
- Sub-index 4_h: restores motor 0 parameters.

Note In order to avoid restoring the parameters by mistake, restoring is only executed when a specific signature is written to the appropriate sub-Index. This signature is "load" ($64616F6C_h$, see also table 26).

Load Signature			
d	a	o	l
64_h	61_h	$6F_h$	$6C_h$

Table 26: Load Signature

On reception of the correct signature in the appropriate sub-index the device restores the parameter and then confirms the SDO transmission (initiate download response). If the restoring failed, the device responds with an abort SDO transfer (abort code: 06060000_h). If a wrong signature is written, the device refuses to restore and responds with abort SDO transfer (abort code: $0800002x_h$).

On read access, each sub-index provides information if it is possible to restore the parameter group. It reads 1 if yes and 0 if no.

After the default values have been restored they will become active after the next rest or power cycle of the TMCM-1231.

Object Description			
Index	Name	Object Type	Data Type
1011_h	Restore parameters	Array	UNSIGNED32

Table 27: Object Description (1011_h)

©2020 TRINAMIC Motion Control GmbH & Co. KG, Hamburg, Germany
Terms of delivery and rights to technical change reserved.
Download newest version at www.trinamic.com

Entry Description					
Sub-index	Description	Access	PDO Mapping	Value Range	Default Value
01h	Restore all parameters	rw	no	UNSIGNED32	—
02h	Restore communication parameters	rw	no	UNSIGNED32	—
03h	Restore device profile parameters	rw	no	UNSIGNED32	—
04h	Restore motor axis 0 parameters	rw	no	UNSIGNED32	—

Table 28: Entry Description (1011_h)

3.1.11 Object 1014_h: COB-ID Emergency Object

This object defines the COB-ID of the emergency object (EMCY).

Object Description			
Index	Name	Object Type	Data Type
1014_h	COB-ID emergency object	Variable	UNSIGNED32

Table 29: Object Description (1014_h)

Entry Description				
Sub-index	Access	PDO Mapping	Value Range	Default Value
0	rw	no	UNSIGNED32	80_h + Node ID

Table 30: Entry Description (1014_h)

3.1.12 Object 1015_h: Inhibit Time EMCY

The inhibit time for the EMCY message can be adjusted via this entry. The time has to be a multiple of $100\mu s$.

Object Description			
Index	Name	Object Type	Data Type
1015_h	COB-ID emergency object	Variable	UNSIGNED16

Table 31: Object Description (1015_h)

Entry Description				
Sub-index	Access	PDO Mapping	Value Range	Default Value
0	rw	no	UNSIGNED16	0

Table 32: Entry Description (1015_h)

©2020 TRINAMIC Motion Control GmbH & Co. KG, Hamburg, Germany
Terms of delivery and rights to technical change reserved.
Download newest version at www.trinamic.com

3.1.13 Object 1016_h: Consumer Heartbeat Time

The consumer heartbeat time defines the expected heartbeat cycle time and thus has to be higher than the corresponding producer heartbeat time configured on the module producing this heartbeat. The monitoring starts after the reception of the first heartbeat. If the consumer heartbeat time is 0 the corresponding entry is not used. The time has to be a multiple of 1ms.

Value Definition		
Bits	Name	Definition
31…24	Reserved	—
23…16	Node ID	Heartbeat Producer Node ID
15…0	Heartbeat time	Time in 1ms

Table 33: Value Definition (1016_h)

Object Description			
Index	Name	Object Type	Data Type
1016_h	Consumer heartbeat time	Array	UNSIGNED32

Table 34: Object Description (1016_h)

Entry Description					
Sub-index	Description	Access	PDO Mapping	Value Range	Default Value
0	Number of entries	ro	no	UNSIGNED8	1
1	Consumer heartbeat time 1	rw	no	UNSIGNED32	0

Table 35: Entry Description (1016_h)

3.1.14 Object 1017_h: Producer Heartbeat Time

The producer heartbeat time defines the cycle time of the heartbeat. The producer heartbeat time is 0 if it is not used. The time has to be a multiple of 1ms.

Object Description			
Index	Name	Object Type	Data Type
1017_h	Producer heartbeat time	Variable	UNSIGNED16

Table 36: Object Description (1017_h)

©2020 TRINAMIC Motion Control GmbH & Co. KG, Hamburg, Germany
Terms of delivery and rights to technical change reserved.
Download newest version at www.trinamic.com

Entry Description				
Sub-index	Access	PDO Mapping	Value Range	Default Value
0	rw	no	UNSIGNED16	0

Table 37: Entry Description (1017_h)

3.1.15 Object 1018_h: Identity Object

The object 1018_h contains general information about the device:

- The vendor ID (sub-index 01_h) contains a unique value allocated to each manufacturer. The vendor ID of Trinamic is 286_h.
- The manufacturer specific product code (sub-index 2_h) identifies a specific device version.
- The manufacturer specific revision number (sub-index 3_h) consists of a major revision number and a minor revision number.

Object Description			
Index	Name	Object Type	Data Type
1018_h	Identity object	Record	Identity

Table 38: Object Description (1018_h)

Entry Description					
Sub-index	Description	Access	PDO Mapping	Value Range	Default Value
00_h	Number of entries	ro	no	0…3	3
01_h	Vendor ID	ro	no	UNSIGNED32	0286_h
02_h	Product code	ro	no	UNSIGNED32	1231
03_h	Revision number	ro	no	UNSIGNED32	e.g. 20003_h for version 2.3

Table 39: Entry Description (1018_h)

3.1.16 Object 1029_h: Error Behaviour

If a device failure is detected in operational state, the device can be configured to enter alternatively the stopped state or remain in the current state in case of a device failure. Device failures include the following errors:

- Communication error
- Application error

©2020 TRINAMIC Motion Control GmbH & Co. KG, Hamburg, Germany
Terms of delivery and rights to technical change reserved.
Download newest version at www.trinamic.com

Object Description			
Index	Name	Object Type	Data Type
1029_h	Error behaviour	Array	UNSIGNED8

Table 40: Object Description (1029_h)

Entry Description					
Sub-index	Description	Access	PDO Mapping	Value Range	Default Value
00_h	Number of error classes	ro	no	—	2
01_h	Communication error	rw	no	UNSIGNED8	0 (enter stopped state)
02_h	Application error	rw	no	UNSIGNED8	1 (remain in current state)

Table 41: Entry Description (1029_h)

3.1.17 Objects 1400_h – 1403_h: Receive PDO Communication Parameter

This object contains the communication parameters for the RPDOs which the device is able to receive. The sub-index 00_h contains the number of valid entries within the communication record. Its value normally is 2, as this object consists of two other entries.

Sub-index 01_h contains the COB-ID used by this PDO (in bits 10…0). Bit 30 (RTR bit) defines if this PDO uses RTRs. As RTRs are not supported for PDOs by this CANopen implementation, this bit must always be set in order to turn off RTR support for this PDO. Bit 31 defines if this PDO is active or not. If this bit is set, the PDO is inactive, and if this bit is clear, the PDO is active. Before making any changes to a PDO definition, set this bit to inactivate the PDO.

Sub-Index 02_h contains the transmission type of the RPDO. This can be FF_h or FE_h for event-driven, or 00_h for synchronous.

Object Description			
Index	Name	Object Type	Data Type
1400_h – 1403_h	Receive PDO parameter	RECORD	RPDO CommPar
1400_h	RPDO 1	RECORD	RPDO CommPar
1401_h	RPDO 2	RECORD	RPDO CommPar
1402_h	RPDO 3	RECORD	RPDO CommPar
1403_h	RPDO 4	RECORD	RPDO CommPar

Table 42: Object Description (1400_h)

©2020 TRINAMIC Motion Control GmbH & Co. KG, Hamburg, Germany
Terms of delivery and rights to technical change reserved.
Download newest version at www.trinamic.com

Entry Description				
Sub-index	Description	Access	Value Range	Default Value
00_h	Largest sub-index supported	ro	2	2
01_h	COB-ID used by PDO	rw	UNSIGNED32	Index 1400_h: 200_h + Node-ID Index 1401_h: 300_h + Node-ID Index 1402_h: 400_h + Node-ID Index 1403_h: 500_h + Node-ID
02_h	Transmission type	rw	UNSIGNED8	Index 1400_h: FF_h Index 1401_h: FF_h Index 1402_h: FF_h Index 1403_h: FE_h

Table 43: Entry Description (1400_h)

3.1.18 Objects 1600_h – 1603_h: Receive PDO Mapping Parameter

These objects contain the mapping parameters for the RPDOs the device is able to receive. The sub-index 00_h contains the number of valid entries within the mapping record. This number of entries is also the number of the application variables which shall be received with the corresponding RPDO. The sub-indices from 01_h to the number of entries contain the information about the mapped application variables. These entries describe the PDO contents by their index, sub-index and length.

Object Description			
Index	Name	Object Type	Data Type
1600_h – 1603_h	Receive PDO mapping parameter	RECORD	PDO Mapping
1600_h	RPDO 1	RECORD	PDO Mapping
1601_h	RPDO 2	RECORD	PDO Mapping
1602_h	RPDO 3	RECORD	PDO Mapping
1603_h	RPDO 4	RECORD	PDO Mapping

Table 44: Object Description (1600_h)

©2020 TRINAMIC Motion Control GmbH & Co. KG, Hamburg, Germany
Terms of delivery and rights to technical change reserved.
Download newest version at www.trinamic.com

Entry Description				
Sub-index	Description	Access	Value Range	Default Value
00_h	Number of mapped application objects in PDO	rw	0…3	Index 1600_h: 1 Index 1601_h: 2 Index 1602_h: 2 Index 1603_h: 2
01_h	Mapping entry 1	rw	UNSIGNED32	Index 1600_h: 60400010_h Index 1601_h: 60400010_h Index 1602_h: 60400010_h Index 1603_h: 60400010_h
02_h	Mapping entry 2	rw	UNSIGNED32	Index 1600_h: 0 Index 1601_h: 60600008_h Index 1602_h: $607A0020_h$ Index 1603_h: $60FF0020_h$
03_h	Mapping entry 3	rw	UNSIGNED32	Index 1600_h: 0_h Index 1601_h: 0_h Index 1602_h: 0_h Index 1603_h: 0_h

Table 45: Entry Description (1600_h)

Before making changes to PDO definitions, first mark the PDO as inactive by setting bit 31 of its COB-ID (see section 3.1.17). Then, set its number of mapped PDO entries to zero (sub-index 0 of the appropriate PDO mapping object). Now, the mapppings themself can be changed. After that, set the number of map objects to the desired value, and finally activate the PDO by clearing bit 31 of its COB-ID.

3.1.19 Objects 1800_h – 1803_h: Transmit PDO Communication Parameter

This object contains the communication parameters for the TPDOs which the device is able to transmit. The sub-index 00_h contains the number of valid entries within the communication record. Its value normally is 5, as this object consists of five other entries.

Sub-index 01_h contains the COB-ID used by this PDO (in bits 10…0). Bit 30 (RTR bit) defines if this PDO uses RTRs. As RTRs are not supported for PDOs by this CANopen implementation, this bit must always be set in order to turn off RTR support for this PDO. Bit 31 defines if this PDO is active or not. If this bit is set, the PDO is inactive, and if this bit is clear, the PDO is active. Before making any changes to a PDO definition, set this bit to inactivate the PDO.

Sub-index 02_h contains the transmission type of the RPDO. This can be FF_h or FE_h for event-driven, or 00_h or 01_h for synchronous.

Sub-index 03_h contains the inhibit time, given in milliseconds. After a TPDO has been sent, it will not be sent again before the inhibit time has elapsed.

Sub-index 04_h is not used.

Sub-index 05_h contains the event timer value in milliseconds. When this is set to a value greater than 0 the TPDO will be sent repeatedly each time the event timer has elapsed. For example, when this value is set to 250, the TPDO will be sent every 250ms.

©2020 TRINAMIC Motion Control GmbH & Co. KG, Hamburg, Germany
Terms of delivery and rights to technical change reserved.
Download newest version at www.trinamic.com

Object Description			
Index	Name	Object Type	Data Type
1800_h – 1803_h	Transmit PDO communication parameter	RECORD	TPDO CommPar
1800_h	TPDO 1	RECORD	TPDO CommPar
1801_h	TPDO 2	RECORD	TPDO CommPar
1802_h	TPDO 3	RECORD	TPDO CommPar
1803_h	TPDO 4	RECORD	TPDO CommPar

Table 46: Object Description (1800_h)

Entry Description				
Sub-index	Description	Access	Value Range	Default Value
00_h	Largest sub-index supported	ro	5	5
01_h	COB-ID	rw	UNSIGNED32	Index 1800_h: 180_h + Node-ID Index 1801_h: 280_h + Node-ID Index 1802_h: 380_h + Node-ID Index 1803_h: 480_h + Node-ID
02_h	Transmission type	rw	UNSIGNED8	Index 1800_h: FF_h Index 1801_h: FF_h Index 1802_h: 01_h Index 1803_h: 01_h
03_h	Inhibit time	rw	UNSIGNED16	0
04_h	Compatibility entry	ro	UNSIGNED8	0
05_h	Event timer	rw	UNSIGNED16	0

Table 47: Entry Description (1800_h)

3.1.20 Objects $1A00_h$ – $1A03_h$: Transmit PDO Mapping Parameter

These objects contain the mapping parameters for the TPDOs the device is able to transmit. The sub-index 00_h contains the number of valid entries within the mapping record. This number of entries is also the number of the application variables which shall be transmitted with the corresponding TPDO. The sub-indices from 01_h to the number of entries contain the information about the mapped application variables. These entries describe the PDO contents by their index, sub-index and length.

©2020 TRINAMIC Motion Control GmbH & Co. KG, Hamburg, Germany
Terms of delivery and rights to technical change reserved.
Download newest version at www.trinamic.com

Object Description			
Index	Name	Object Type	Data Type
$1A00_h$ – $1A03_h$	Transmit PDO mapping parameter	RECORD	PDO Mapping
$1A00_h$	TPDO 1	RECORD	PDO Mapping
$1A01_h$	TPDO 2	RECORD	PDO Mapping
$1A02_h$	TPDO 3	RECORD	PDO Mapping
$1A03_h$	TPDO 4	RECORD	PDO Mapping

Table 48: Object Description ($1A00_h$)

Entry Description				
Sub-index	Description	Access	Value Range	Default Value
00_h	Number of mapped aapli-cation objects in PDO	rw	0…3	Index $1A00_h$: 1 Index $1A01_h$: 2 Index $1A02_h$: 2 Index $1A03_h$: 2
01_h	Mapping entry 1	rw	UNSIGNED32	Index $1A00_h$: 60410010_h Index $1A01_h$: 60410010_h Index $1A02_h$: 60410010_h Index $1A03_h$: 60410010_h
02_h	Mapping entry 2	rw	UNSIGNED32	Index $1A00_h$: 0 Index $1A01_h$: 60610008_h Index $1A02_h$: 60640020_h Index $1A03_h$: $606C0020_h$
03_h	Mapping entry 3	rw	UNSIGNED32	Index $1A00_h$: 0_h Index $1A01_h$: 0_h Index $1A02_h$: 0_h Index $1A03_h$: 0_h

Table 49: Entry Description ($1A00_h$)

Before making changes to PDO definitions, first mark the PDO as inactive by setting bit 31 of its COB-ID (see section 3.1.19). Then, set its number of mapped PDO entries to zero (sub-index 0 of the appropriate PDO mapping object). Now, the mapppings themself can be changed. After that, set the number of map objects to the desired value, and finally activate the PDO by clearing bit 31 of its COB-ID.

©2020 TRINAMIC Motion Control GmbH & Co. KG, Hamburg, Germany
Terms of delivery and rights to technical change reserved.
Download newest version at www.trinamic.com

4 Manufacturer specific Area

The manufacturer segment contains manufacturer specific objects. These objects control the special features of the Trinamic Motion Control device TMCM-1231.

4.1 Objects related to CoolStep™

Figure 6 shows an overview of the CoolStep™ related objects for motor #0. Please bear in mind that the figure only shows one example for a drive. There are objects which concern the configuration of the current. Other objects are for velocity regulation and for time adjustment. The CoolStep™ feature is sometimes also called SmartEnergy.

The following adjustments have to be made:

- Thresholds for current and velocity have to be identified and set.
- The StallGuard2™ feature has to be adjusted and enabled.
- The reduction or increasing of the current in the CoolStep™ area (depending on the load) has to be configured.

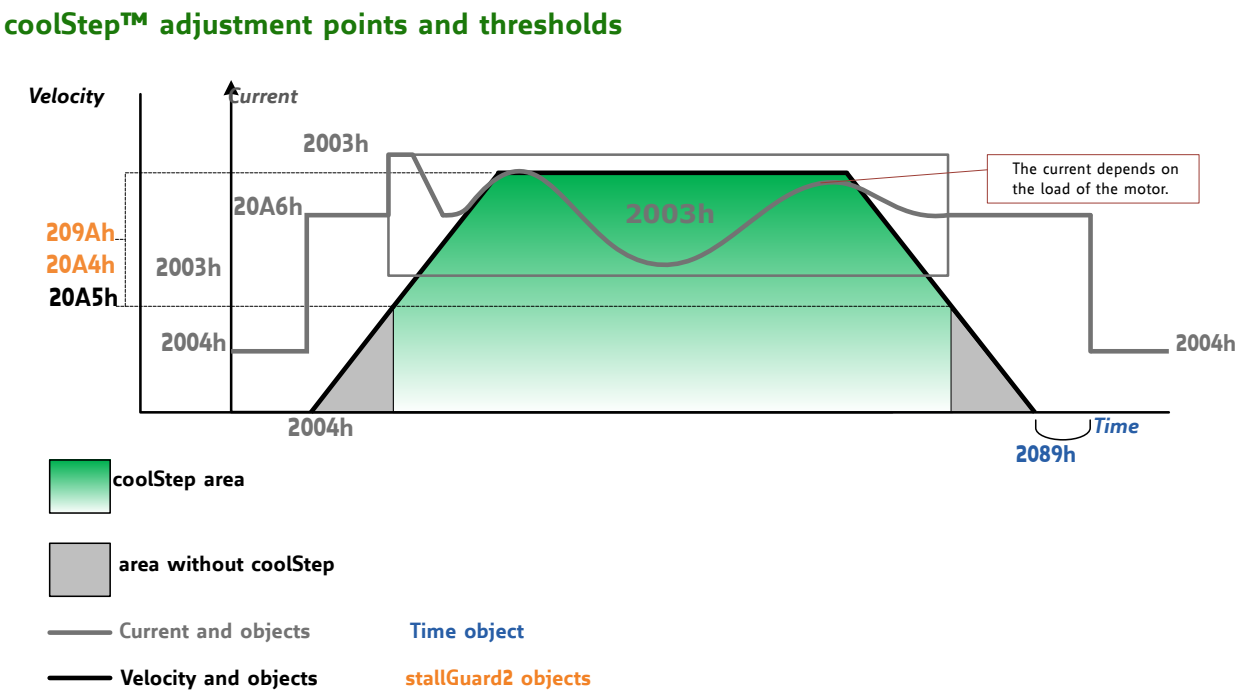

Figure 6: CoolStep Adjustment Points and Thresholds

©2020 TRINAMIC Motion Control GmbH & Co. KG, Hamburg, Germany
Terms of delivery and rights to technical change reserved.
Download newest version at www.trinamic.com

CoolStep Adjustment Objects		
Object	Name	Description
2003_h	Absolute maximum current	The maximum value is 255. This value means 100% of the maximum current of the module. The current adjustment is within the range 0…255 and can be adjusted in 32 steps (0…255 divided by eight; step 0 = 0…7, step 1 = 8…15 and so on). The most important motor setting, since too high values might cause motor damage!
2004_h	Standby current	The current limit two seconds after the motor has stopped.
2098_h	SmartEnergy current minimum	Sets the lower motor current limit for CoolStep operation by scaling the run current (object 2003_h) value. This can be: 0: for 1/2 of the run current 1: for 1/4 of the run current
2099_h	SmartEnergy current down step	Sets the speed of current decrement when the StallGuard2 reading is above the upper threshold. 0: slow decrement 3: fast decrement
$209B_h$	SmartEnergy current up step	Sets the current increment step when the StallGuard2 below the lower threshold. 0: slow increment 3: fast increment / fast reaction to rising load
$209A_h$	SmartEnergy hysteresis	Sets the distance between the lower and the upper threshold for StallGuard2 reading. Above the upper threshold the motor current becomes decreased.
$20A4_h$	Stop on stall	Below this speed the motor will not be stopped. Above this speed the motor will stop in case StallGuard2 load value reaches zero.
$20A5_h$	SmartEnergy threshold speed.	Above this speed CoolStep becomes enabled.
2089_h	Standby delay	Standstill period before the current is changed down to standby current. The standard value is 200 which is 2 seconds.

Table 50: CoolStep related Objects

©2020 TRINAMIC Motion Control GmbH & Co. KG, Hamburg, Germany
Terms of delivery and rights to technical change reserved.
Download newest version at www.trinamic.com

4.2 Detailed Object Specifications

4.2.1 Object 2000_h: Microstep Resolution

This object sets the microstep resolution of the drive. A value of 8 selects 256 (2^8) microsteps per full step.

Object Description			
Index	Name	Object Type	Data Type
2000_h	Microstep Resolution	Variable	UNSIGNED8

Table 51: Object Description (2000_h)

Entry Description				
Sub-index	Access	PDO Mapping	Value Range	Default Value
0	rw	no	0…8	8

Table 52: Entry Description (2000_h)

4.2.2 Object 2001_h: Fullstep Resolution

This object sets the fullstep resolution of the motor connected to the drive. Its default value is 200 because most motors are 1.8° motors.

Object Description			
Index	Name	Object Type	Data Type
2001_h	Motor full step resolution	Variable	UNSIGNED16

Table 53: Object Description (2001_h)

Entry Description				
Sub-index	Access	PDO Mapping	Value Range	Default Value
0	rw	no	0…65535	200

Table 54: Entry Description (2001_h)

4.2.3 Object 2002_h: Brake Delay Times

With this object the delay times for applying and releasing an (optional) brake can be defined. Please see also object 200Ah for an additional delay between enabling the power stage and releasing the brake. Both times are given in ms.

©2020 TRINAMIC Motion Control GmbH & Co. KG, Hamburg, Germany
Terms of delivery and rights to technical change reserved.
Download newest version at www.trinamic.com

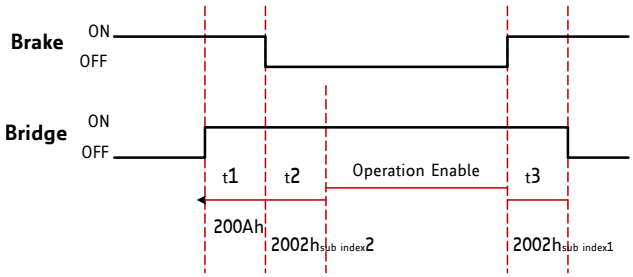

Figure 7: Brake Output Timing

Object Description			
Index	Name	Object Type	Data Type
2002_h	Brake delay times	Array	UNSIGNED16

Table 55: Object Description (2002_h)

Entry Description					
Sub-index	Description	Access	PDO Mapping	Value Range	Default Value
1	Time between applying brake / disabling power stage	rw	no	0…65535	0
2	Time between releasing brake / switching the state machine to operational	rw	no	0..65535	0

Table 56: Entry Description (2002_h)

4.2.4 Object 2003_h: Maximum Current

This object defines the current used when the motor is moving. A value of 255 means 100% of the maximum current of the drive.

Object Description			
Index	Name	Object Type	Data Type
2003_h	Maximum current	Variable	UNSIGNED8

Table 57: Object Description (2003_h)

Entry Description				
Sub-index	Access	PDO Mapping	Value Range	Default Value
0	rw	no	0…255	128

Table 58: Entry Description (2003_h)

©2020 TRINAMIC Motion Control GmbH & Co. KG, Hamburg, Germany
Terms of delivery and rights to technical change reserved.
Download newest version at www.trinamic.com

4.2.5 Object 2004_h: Standby Current

This object defines the current used when the motor is standing (two seconds after the last move). A value of 255 means 100% of the maximum current of the drive.

Object Description			
Index	Name	Object Type	Data Type
2004_h	Maximum current	Variable	UNSIGNED8

Table 59: Object Description (2004_h)

Entry Description				
Sub-index	Access	PDO Mapping	Value Range	Default Value
0	rw	no	0…255	8

Table 60: Entry Description (2004_h)

4.2.6 Object 2005_h: Limit Switches

This object defines which limit switches are to be used. Bit 0 stands for the left and bit 1 stands for the right limit switch. If a bit is set, the corresponding limit switch will not be used. So this object has to be set to the value 3 if limit switches are not connected. The object can only be written when the drive is in the SWITCHED_ON_DISABLED state (but is always readable).

The limit switches can also be inverted using bit 2 and bit 3:

- Bit 2 inverts the left limit switch
- Bit 3 inverts the right limit switch

The polarity of the home switch can be set using bit 5.

Object Description			
Index	Name	Object Type	Data Type
2005_h	Limit switches	Variable	UNSIGNED32

Table 61: Object Description (2005_h)

Entry Description				
Sub-index	Access	PDO Mapping	Value Range	Default Value
0	rw	no	0…63	0

Table 62: Entry Description (2005_h)

©2020 TRINAMIC Motion Control GmbH & Co. KG, Hamburg, Germany
Terms of delivery and rights to technical change reserved.
Download newest version at www.trinamic.com

Bit Definitions	
Bit	Definition
0	Left limit switch deactivated if set.
1	Right limit switch deactivated if set.
2	Left limit switch inverted if set.
3	Right limit switch inverted if set.
4	Home switch deactivated if set.
5	Home switch inverted if set.

Table 63: Bit Definitions (2005_h)

4.2.7 Object $200A_h$: Enable Drive Delay Time

This is an additional delay time (in milliseconds) between enabling the power stage and releasing the brake. It can be used to prevent the brake from being released too early (before the hold current in the motor has been reached). Please see also object 4.2.3.

Object Description			
Index	Name	Object Type	Data Type
$200A_h$	Enable drive delay time	Variable	UNSIGNED16

Table 64: Object Description ($200A_h$)

Entry Description				
Sub-index	Access	PDO Mapping	Value Range	Default Value
0	rw	no	0…65535	0

Table 65: Entry Description $(200A)_h$

4.2.8 Object $200B_h$: Encoder Parameters

This object defines encoder parameters. These are the polarity of the encoder null channel, the direction of rotaion (set it to 1 if the direction is reversed compared to the motor) and if the position is to be intialized with the encoder position. It is only writable in SWITCHED_ON_DISABLED state.

Object Description			
Index	Name	Object Type	Data Type
$200B_h$	Encoder parameters	Array	UNSIGNED8

Table 66: Object Description ($200B_h$)

©2020 TRINAMIC Motion Control GmbH & Co. KG, Hamburg, Germany
Terms of delivery and rights to technical change reserved.
Download newest version at www.trinamic.com

Entry Description					
Sub-index	Description	Access	PDO Mapping	Value Range	Default Value
1	Null channel polarity	rw	no	0/1	0
2	Direction of rotation	rw	no	0/1	0
3	Initialize position	rw	no	0/1	1

Table 67: Entry Description ($200B_h$)

4.2.9 Object $200C_h$: Brake Current Feed

This object configures how much current has to be fed into the brake to apply and to release it. 0 means 0%, 255 means 100% of the maximum current (this depends on the module). In most cases it is needed to feed current into the brake to release it. Setting both values to 0 disables the automatic brake control. This object is only writable in SWITCHED_ON_DISABLED state.

Object Description			
Index	Name	Object Type	Data Type
$200C_h$	Brake current feed	Array	UNSIGNED8

Table 68: Object Description ($200C_h$)

Entry Description					
Sub-index	Description	Access	PDO Mapping	Value Range	Default Value
1	Apply current	rw	no	0…255	0
2	Release current	rw	no	0…255	0

Table 69: Entry Description ($200C_h$)

4.2.10 Object $200F_h$: Encoder N Channel Latch

With this object it is possible to make use of the encoder N channel latch capabilities of the motion controller used on the TMCM-1231 module. Write 1 to sub-index 1 to activate the latch functionality. When the encoder N channel has been passed, the internal position and the encoder position will automatically be stored to sub-index 2 and sub-index 3 of this object, and sub-index 1 will be reset to zero to show that the N channel event has occurred.
The encoder interface must have been configured properly in order to make this function work correctly.

Object Description			
Index	Name	Object Type	Data Type
$200F_h$	Encoder N Channel Latch	Variable	RECORD

Table 70: Object Description ($200F_h$)

©2020 TRINAMIC Motion Control GmbH & Co. KG, Hamburg, Germany
Terms of delivery and rights to technical change reserved.
Download newest version at www.trinamic.com

Entry Description					
Sub-index	Description	Access	PDO Mapping	Value Range	Default Value
1	Mode	rw	no	0/1	0
2	Latched internal position	ro	no	SIGNED32	0
3	Latched encoder position	ro	no	SIGNED32	0

Table 71: Entry Description ($200F_h$)

4.2.11 Object 2010_h: Profile Start Velocity

This object contains the velocity with which a positioning ramp will be started.

Object Description			
Index	Name	Object Type	Data Type
2010_h	Profile Start Velocity	Variable	UNSIGNED32

Table 72: Object Description (2010_h)

Entry Description				
Sub-index	Access	PDO Mapping	Value Range	Default Value
0	rw	no	0…268435455	0

Table 73: Entry Description (2010_h)

4.2.12 Object 2011_h: Profile Start Acceleration

This object contains the acceleration value used for ramping up from the start velocity (object 2011_h, see section 4.2.11) to the velocity V1 (object ($_h$2012), see section 4.2.13).

Object Description			
Index	Name	Object Type	Data Type
2011_h	Profile A1	Variable	UNSIGNED32

Table 74: Object Description (2011_h)

Entry Description				
Sub-index	Access	PDO Mapping	Value Range	Default Value
0	rw	no	0…16777215	0

Table 75: Entry Description (2011_h)

©2020 TRINAMIC Motion Control GmbH & Co. KG, Hamburg, Germany
Terms of delivery and rights to technical change reserved.
Download newest version at www.trinamic.com

4.2.13 Object 2012_h: Profile Break Velocity

This object contains the velocity used for the first segment of a positioning ramp.

Object Description			
Index	Name	Object Type	Data Type
2012_h	Profile V1	Variable	UNSIGNED32

Table 76: Object Description (2012_h)

Entry Description				
Sub-index	Access	PDO Mapping	Value Range	Default Value
0	rw	no	0…16777215	0

Table 77: Entry Description (2012_h)

4.2.14 Object 2013_h: Profile Final Deceleration

This object contains the deceleration value used for decelerating from the maximum positioning velocity to the velocity V1 (object 2012_h, see section 4.2.13).

Object Description			
Index	Name	Object Type	Data Type
2013_h	Profile D1	Variable	UNSIGNED32

Table 78: Object Description (2013_h)

Entry Description				
Sub-index	Access	PDO Mapping	Value Range	Default Value
0	rw	no	0…16777215	0

Table 79: Entry Description (2013_h)

4.2.15 Object 2014_h: Profile Stop Deceleration

This object sets the deceleration used to decelerate from the end velocity to zero velocity.

Object Description			
Index	Name	Object Type	Data Type
2014_h	Profile stop deceleration	Variable	UNSIGNED32

Table 80: Object Description (2014_h)

©2020 TRINAMIC Motion Control GmbH & Co. KG, Hamburg, Germany
Terms of delivery and rights to technical change reserved.
Download newest version at www.trinamic.com

Entry Description				
Sub-index	Access	PDO Mapping	Value Range	Default Value
0	rw	no	UNSIGNED32	0

Table 81: Entry Description (2014_h)

4.2.16 Object 2015_h: Bow Scaling Factor

The bow or jerk values (object $60A4_h$) will internally be multiplied by this value so that also bow values higher than 2147483647 can be reached. This is only needed in rare cases where very steep S-shaped ramps are required. In most cases this value can be left at its default setting of 1. The bow values multiplied by this factor must not exceed $467.837 \cdot 10^9$.

Object Description			
Index	Name	Object Type	Data Type
2015_h	Ramp Wait Time	Variable	UNSIGNED8

Table 82: Object Description (2015_h)

Entry Description				
Sub-index	Access	PDO Mapping	Value Range	Default Value
0	rw	no	1…255	1

Table 83: Entry Description (2015_h)

4.2.17 Object $204E_h$: Boost Current

This object defines the motor current that will be used during the acceleration phase and the deceleration phase in open-loop mode. A value of 255 means 100% of the maximum motor current of the drive. When this object is set to zero the run current (section 4.2.4) will also be used for the acceleration abd deceleration phase.

Object Description			
Index	Name	Object Type	Data Type
$204E_h$	Field weakening	Variable	UNSIGNED8

Table 84: Object Description ($204E_h$)

Entry Description				
Sub-index	Access	PDO Mapping	Value Range	Default Value
0	rw	no	0…255	—

Table 85: Entry Description ($204E_h$)

©2020 TRINAMIC Motion Control GmbH & Co. KG, Hamburg, Germany
Terms of delivery and rights to technical change reserved.
Download newest version at www.trinamic.com

4.2.18 Object 2089_h: Setting Delay

This object has to be used for setting a standstill period before the current is changed down to standby current.

Unit: 10msec

Object Description			
Index	Name	Object Type	Data Type
2089_h	Setting Delay	Variable	UNSIGNED16

Table 86: Object Description (2089_h)

Entry Description				
Sub-index	Access	PDO Mapping	Value Range	Default Value
0	rw	no	0...65535	200

Table 87: Entry Description (2089_h)

4.2.19 Object $208C_h$: Velocity Dimension Index

With this object different units can be chosen:

- Writing 0 selects internal units.
- Writing 181 sets PPS for velocity and PPS/s for acceleration.

This can only be changed in SWITCHED_ON_DISABLED mode.

Object Description			
Index	Name	Object Type	Data Type
$208C_h$	Velocity Dimension Index	Variable	UNSIGNED8

Table 88: Object Description ($208C_h$)

Entry Description				
Sub-index	Access	PDO Mapping	Value Range	Default Value
0	rw	no	0/181	181

Table 89: Entry Description ($208C_h$)

4.2.20 Object $208E_h$: Acceleration Dimension Index

With this object, the unit for acceleration can be read out. The unit can be set using object $208C_h$. Object $208E_h$ reads 0 when internal units are selected and 179 when PPS/s is selected.

©2020 TRINAMIC Motion Control GmbH & Co. KG, Hamburg, Germany
Terms of delivery and rights to technical change reserved.
Download newest version at www.trinamic.com

Object Description			
Index	Name	Object Type	Data Type
$208E_h$	Acceleration Dimension Index	Variable	UNSIGNED8

Table 90: Object Description ($208E_h$)

Entry Description				
Sub-index	Access	PDO Mapping	Value Range	Default Value
0	ro	no	0/179	179

Table 91: Entry Description ($208E_h$)

4.2.21 Object 2092_h: Chopper Blank Time

This object serves for selecting the comparator blank time. This time needs to safely cover the switching event and the duration of the ringing on the sense resistor. For low current drivers, a setting of 1 or 2 is good. For higher current applications a setting of 2 or 3 will be required.

Object Description			
Index	Name	Object Type	Data Type
2092_h	Chopper Blank Time	Variable	UNSIGNED8

Table 92: Object Description (2092_h)

Entry Description				
Sub-index	Access	PDO Mapping	Value Range	Default Value
0	rw	no	0…3	2

Table 93: Entry Description (2092_h)

4.2.22 Object 2093_h: Chopper Mode

Select the chopper mode using this object:

- 0 – spreadCycle chopper
- 1 – classic constant off time chopper

Object Description			
Index	Name	Object Type	Data Type
2093_h	Chopper Mode	Variable	UNSIGNED8

Table 94: Object Description (2093_h)

©2020 TRINAMIC Motion Control GmbH & Co. KG, Hamburg, Germany
Terms of delivery and rights to technical change reserved.
Download newest version at www.trinamic.com

Entry Description				
Sub-index	Access	PDO Mapping	Value Range	Default Value
0	rw	no	0/1	0

Table 95: Entry Description (2093_h)

4.2.23 Object 2094_h: Chopper Hysteresis Decrement

This object serves for the hysteresis decrement setting. This setting determines the slope of the hysteresis during on time and during fast decay time.

- 0 – fast decrement
- 3 – very slow decrement

Object Description			
Index	Name	Object Type	Data Type
2094_h	Chopper Hysteresis Decrement	Variable	UNSIGNED8

Table 96: Object Description (2094_h)

Entry Description				
Sub-index	Access	PDO Mapping	Value Range	Default Value
0	rw	no	0…3	0

Table 97: Entry Description (2094_h)

4.2.24 Object 2095_h: Chopper Hysteresis End

This object provides the setting of the hysteresis end value after a number of decrements. The decrement interval time is controlled by object 2094_h (section 4.2.23).
Possible values are:

- -3…-1 – negative hysteresis end setting
- 0 – zero hysteresis end setting
- 1…12 – positive hysteresis end setting

Object Description			
Index	Name	Object Type	Data Type
2095_h	Chopper Hysteresis End	Variable	SIGNED8

Table 98: Object Description (2095_h)

©2020 TRINAMIC Motion Control GmbH & Co. KG, Hamburg, Germany
Terms of delivery and rights to technical change reserved.
Download newest version at www.trinamic.com

Entry Description				
Sub-index	Access	PDO Mapping	Value Range	Default Value
0	rw	no	-3…12	0

Table 99: Entry Description (2095_h)

4.2.25 Object 2096_h: Chopper Hysteresis Start

This object provides the hysteresis start setting. Please notice that this value is an offset to the hysteresis end value.

Object Description			
Index	Name	Object Type	Data Type
2096_h	Chopper Hysteresis Start	Variable	UNSIGNED8

Table 100: Object Description (2096_h)

Entry Description				
Sub-index	Access	PDO Mapping	Value Range	Default Value
0	rw	no	0…8	3

Table 101: Entry Description (2096_h)

4.2.26 Object 2097_h: Chopper Off Time

The off time setting controls the minimum chopper frequency. Under normal circumstances, an off time within the range of 5μs to 20μs is used. Off time setting for constant t_{OFF} chopper: $N_{CLK} = 12 + 32 * t_{OFF}$. Minimum is 64 clocks.
Setting this parameter to zero completely disables all driver transistors and so lets the motor free-wheel.

Object Description			
Index	Name	Object Type	Data Type
2097_h	Chopper Off Time	Variable	UNSIGNED8

Table 102: Object Description (2097_h)

Entry Description				
Sub-index	Access	PDO Mapping	Value Range	Default Value
0	rw	no	0 / 2…15	5

Table 103: Entry Description (2097_h)

©2020 TRINAMIC Motion Control GmbH & Co. KG, Hamburg, Germany
Terms of delivery and rights to technical change reserved.
Download newest version at www.trinamic.com

4.2.27 Object 2098_h: Smart Energy Current Minimum

This object provides the setting of the lower motor current limit for CoolStep™ operation by scaling the CS value.
Possible values are:

- 0 – $1/2$ of maximum motor current setting (section 4.2.4)
- 1 – $1/4$ of maximum motor current setting (section 4.2.4)

Object Description			
Index	Name	Object Type	Data Type
2098_h	Smart Energy Current Minimum	Variable	UNSIGNED8

Table 104: Object Description (2098_h)

Entry Description				
Sub-index	Access	PDO Mapping	Value Range	Default Value
0	rw	no	0/1	0

Table 105: Entry Description (2098_h)

4.2.28 Object 2099_h: Smart Energy Current Down Step

This object provides the setting of the number of StallGuard2 readings above the upper threshold necessary for each current decrement of the motor current.
Possible values are:

- 0 – 32 measurements – slowest decrement
- 1 – 8 measurements
- 2 – 2 measurements
- 3 – 1 measurements – fastest decrement

Object Description			
Index	Name	Object Type	Data Type
2099_h	Smart Energy Current Down Step	Variable	UNSIGNED8

Table 106: Object Description (2099_h)

Entry Description				
Sub-index	Access	PDO Mapping	Value Range	Default Value
0	rw	no	0…3	0

Table 107: Entry Description (2099_h)

©2020 TRINAMIC Motion Control GmbH & Co. KG, Hamburg, Germany
Terms of delivery and rights to technical change reserved.
Download newest version at www.trinamic.com

4.2.29 Object $209A_h$: Smart Energy Hysteresis

This object sets the distance between the lower and the upper threshold for StallGuard2 reading. Above the upper threshold the motor current becomes decreased.

Hysteresis: $(\text{SmartEnergy hysteresis value} + 1) * 32$
Upper StallGuard2 threshold: $(\text{SmartEnergy hysteresis start} + \text{SmartEnergy hysteresis} + 1) * 32$

Object Description			
Index	Name	Object Type	Data Type
$209A_h$	Smart Energy Hysteresis	Variable	UNSIGNED8

Table 108: Object Description ($209A_h$)

Entry Description				
Sub-index	Access	PDO Mapping	Value Range	Default Value
0	rw	no	0…15	0

Table 109: Entry Description ($209A_h$)

4.2.30 Object $209B_h$: Smart Energy Current Up Step

This object sets the current increment step. The current becomes incremented for each measured StallGuard2 value below the lower threshold (see smart energy hysteresis start (object $209C_h$, section 4.2.31). Possible values are:

- 0 – 1 step – slowest increment
- 1 – 2 steps
- 2 – 4 steps
- 3 – 8 steps – fastest increment

Object Description			
Index	Name	Object Type	Data Type
$209B_h$	Smart Energy Current Up Step	Variable	UNSIGNED8

Table 110: Object Description ($209B_h$)

Entry Description				
Sub-index	Access	PDO Mapping	Value Range	Default Value
0	rw	no	0…3	0

Table 111: Entry Description ($209B_h$)

©2020 TRINAMIC Motion Control GmbH & Co. KG, Hamburg, Germany
Terms of delivery and rights to technical change reserved.
Download newest version at www.trinamic.com

4.2.31 Object $209C_h$: Smart Energy Hysteresis Start

This object serves to set the lower threshold for the StallGuard2 value (see smart Energy current up step (section 4.2.30). Setting this to 0 disables the CoolStep™ function.

Object Description			
Index	Name	Object Type	Data Type
$209C_h$	Smart Energy Hysteresis Start	Variable	UNSIGNED8

Table 112: Object Description ($209C_h$)

Entry Description				
Sub-index	Access	PDO Mapping	Value Range	Default Value
0	rw	no	0…15	0

Table 113: Entry Description ($209C_h$)

4.2.32 Object $209D_h$: Smart Energy Filter Enable

This object is used to set the StallGuard2 filter for more precision of the measurement. It reduces the measurement frequency to one measurement per four fullsteps if set.
In most cases it is expedient to set the filtered mode when using CoolStep™. Use the standard mode for step loss detection.
Possible values are:

- 0 – standard mode
- 1 – filtered mode

Object Description			
Index	Name	Object Type	Data Type
$209D_h$	Smart Energy Filter Enable	Variable	UNSIGNED8

Table 114: Object Description ($209D_h$)

Entry Description				
Sub-index	Access	PDO Mapping	Value Range	Default Value
0	rw	no	0/1	0

Table 115: Entry Description ($209D_h$)

4.2.33 Object $209E_h$: StallGuard2 Threshold

This signed value controls the StallGuard2 threshold level for stall output and sets the optimum measurement range for readout. A lower value gives a higher sensitivity. Zero is the starting value. A higher value

©2020 TRINAMIC Motion Control GmbH & Co. KG, Hamburg, Germany
Terms of delivery and rights to technical change reserved.
Download newest version at www.trinamic.com

makes StallGuard2 less sensitive and requires more torque to indicate a stall.

Object Description			
Index	Name	Object Type	Data Type
$209E_h$	StallGuard2 Threshold	Variable	SIGNED8

Table 116: Object Description ($209E_h$)

Entry Description				
Sub-index	Access	PDO Mapping	Value Range	Default Value
0	rw	no	-63…63	0

Table 117: Entry Description ($209E_h$)

4.2.34 Object $20A1_h$: Short Protection Disable

This object is used to enable or to disable the short to ground protection. Normally there is no need to change this. Use the default value.
Possible values are:

- 0 – Short to GND protection enabled
- 1 – Short to GND protection disabled

Object Description			
Index	Name	Object Type	Data Type
$20A1_h$	Short Protection Disable	Variable	UNSIGNED8

Table 118: Object Description ($20A1_h$)

Entry Description				
Sub-index	Access	PDO Mapping	Value Range	Default Value
0	rw	no	0/1	0

Table 119: Entry Description ($20A1_h$)

4.2.35 Object $20A4_h$: Stop on Stall

Below this speed the motor will not be stopped. Above this speed the motor will be stopped in case the StallGuard2 load value reaches zero.

©2020 TRINAMIC Motion Control GmbH & Co. KG, Hamburg, Germany
Terms of delivery and rights to technical change reserved.
Download newest version at www.trinamic.com

Object Description			
Index	Name	Object Type	Data Type
$20A4_h$	Stop on Stall	Variable	UNSIGNED32

Table 120: Object Description ($20A4_h$)

Entry Description				
Sub-index	Access	PDO Mapping	Value Range	Default Value
0	rw	no	0…2147483647	0

Table 121: Entry Description ($20A4_h$)

4.2.36 Object $20A5_h$: Smart Energy Threshold Speed

The CoolStep™ functionality will be enabled when the actual speed is above this speed. It will be disabled again when the actual speed drops below this value.

Object Description			
Index	Name	Object Type	Data Type
$20A5_h$	Smart Energy Threshold Speed	Variable	UNSIGNED32

Table 122: Object Description ($20A5_h$)

Entry Description				
Sub-index	Access	PDO Mapping	Value Range	Default Value
0	rw	no	0…2147483647	0

Table 123: Entry Description ($20A5_h$)

4.2.37 Object $20B0_h$: PWM Threshold Speed

The StealthChop feature will be switched on when the value of this object is greater than zero and the actual velocity is lower than the value set by this object.

Object Description			
Index	Name	Object Type	Data Type
$20B0_h$	PWM Threshold Speed	Variable	UNSIGNED32

Table 124: Object Description ($20B0_h$)

©2020 TRINAMIC Motion Control GmbH & Co. KG, Hamburg, Germany
Terms of delivery and rights to technical change reserved.
Download newest version at www.trinamic.com

Entry Description				
Sub-index	Access	PDO Mapping	Value Range	Default Value
0	rw	no	0…16777215	0

Table 125: Entry Description ($20B0_h$)

4.2.38 Object $20B1_h$: PWM Gradient

Velocity dependent gradient for the PWM amplitude (StealthChop). Setting this value to 0 turns off StealthChop.

Object Description			
Index	Name	Object Type	Data Type
$20B1_h$	PWM Gradient	Variable	UNSIGNED8

Table 126: Object Description ($20B1_h$)

Entry Description				
Sub-index	Access	PDO Mapping	Value Range	Default Value
0	rw	no	0…255	0

Table 127: Entry Description ($20B1_h$)

4.2.39 Object $20B2_h$: PWM Amplitude

Maximum PWM amplitude when switching to StealthChop mode. Do not set too low. Values above 64 are recommended.

Object Description			
Index	Name	Object Type	Data Type
$20B2_h$	PWM Amplitude	Variable	UNSIGNED8

Table 128: Object Description ($20B2_h$)

Entry Description				
Sub-index	Access	PDO Mapping	Value Range	Default Value
0	rw	no	0…255	0

Table 129: Entry Description ($20B2_h$)

©2020 TRINAMIC Motion Control GmbH & Co. KG, Hamburg, Germany
Terms of delivery and rights to technical change reserved.
Download newest version at www.trinamic.com

4.2.40 Object 2100_h: Home Offset Display

This object shows the home offset. The value is given in microsteps.

Object Description			
Index	Name	Object Type	Data Type
2100_h	Home Offset Display	Variable	SIGNED32

Table 130: Object Description (2100_h)

Entry Description				
Sub-index	Access	PDO Mapping	Value Range	Default Value
0	ro	no	-2147483648…2147483647	0

Table 131: Entry Description (2100_h)

4.2.41 Object 2101_h: Actual Load Value

This object shows the actual load value used for stall detection (StallGuard2™).

Object Description			
Index	Name	Object Type	Data Type
2101_h	Actual Load Value	Variable	UNSIGNED16

Table 132: Object Description (2101_h)

Entry Description				
Sub-index	Access	PDO Mapping	Value Range	Default Value
0	ro	no	0…1023	0

Table 133: Entry Description (2101_h)

4.2.42 Object 2102_h: Driver Error Flags

This object shows the error flags of the motor driver IC.

©2020 TRINAMIC Motion Control GmbH & Co. KG, Hamburg, Germany
Terms of delivery and rights to technical change reserved.
Download newest version at www.trinamic.com

Error Flags		
Bit	Name	Meaning
7	OT	Overtemperature
6	OTPW	Temperature pre-warning
5	UV	Undervoltage
4	OCHS	Overcurrent high side
3	OLB	Open load on bridge B
2	OLA	Open load on bridge A
1	OCB	Overcurrent on bridge B
0	OCA	Overcurrent on bridge A

Table 134: Driver Error Flags (2102_h)

Object Description			
Index	Name	Object Type	Data Type
2102_h	Driver Error Flags	Variable	UNSIGNED8

Table 135: Object Description (2102_h)

Entry Description				
Sub-index	Access	PDO Mapping	Value Range	Default Value
0	ro	no	0…255	0

Table 136: Entry Description (2102_h)

4.2.43 Object 2107_h: Microstep Resolution Display

This object shows the microstep resolution, set by object 2000_h (please see section 4.2.1).

Object Description			
Index	Name	Object Type	Data Type
2107_h	Microstep resolution display	Variable	UNSIGNED8

Table 137: Object Description (2107_h)

©2020 TRINAMIC Motion Control GmbH & Co. KG, Hamburg, Germany
Terms of delivery and rights to technical change reserved.
Download newest version at www.trinamic.com

Entry Description				
Sub-index	Access	PDO Mapping	Value Range	Default Value
0	ro	no	0…8	8

Table 138: Entry Description (2107_h)

4.2.44 Object 2700_h: TMCL Direct Communication

After writing the make signature $656b616d_h$ to this object the drive switches to TMCL mode. The drive can then only be controlled via TMCL commands written to the OS command object $1023/01_h$.
The drive can only be reset to normal CANopen functionality using the DS-301 reset application command.

Object Description			
Index	Name	Object Type	Data Type
2700_h	TMCL Direct Communication	Variable	UNSIGNED32

Table 139: Object Description (2700_h)

Entry Description				
Sub-index	Access	PDO Mapping	Value Range	Default Value
0	rw	no	$656b616d_h$	0

Table 140: Entry Description $(2700)_h$

4.2.45 Object 2701_h: Manufacturer Specific Mode

Writing the make signature to this object turns on the manufacturer specific mode. The manufacturer specific mode can be turned off again by writing the kill signature to this object. The manufacturer specific mode has the following features:

- PDOs do not need to be disabled and re-enabled when the PDO mapping is to be changed.
- The RTR bit in the COB-ID of PDO definitions is ignored.

read:	0	=	manufacturer specific mode is inactive
	1	=	manufacturer specific mode is active
write:	$656b616d_h$	=	make signature
	$6c6c696b_h$	=	kill signature

Object Description			
Index	Name	Object Type	Data Type
2701_h	Manufacturer Specific Mode	Variable	UNSIGNED32

Table 141: Object Description (2701_h)

©2020 TRINAMIC Motion Control GmbH & Co. KG, Hamburg, Germany
Terms of delivery and rights to technical change reserved.
Download newest version at www.trinamic.com

Entry Description				
Sub-index	Access	PDO Mapping	Value Range	Default Value
0	rw	no	see above	0

Table 142: Entry Description $(2701)_h$

4.2.46 Object 2702_h: Device Digital Inputs

Bits 23...16 of this object reflect the states of the general purpose inputs of the module. The number of available inputs depends on the module type.

Bit Definitions	
Bit	Description
16	IN0
17	IN1
18	IN2
19	IN3

Table 143: Bit Definitions (2702_h)

Object Description			
Index	Name	Object Type	Data Type
2702_h	Device Digital Inputs	Variable	UNSIGNED32

Table 144: Object Description (2702_h)

Entry Description				
Sub-index	Access	PDO Mapping	Value Range	Default Value
0	ro	yes	–	0

Table 145: Entry Description $(2702)_h$

4.2.47 Object 2703_h: Device Digital Outputs

With this object the digital outputs (general purpose outputs) can be set. Bits 23...16 of sub index 1 switch the outputs of the module. Bits 23...16 of sub index 2 determine which outputs can be switched. The number of available digital outputs depends on the module type.

©2020 TRINAMIC Motion Control GmbH & Co. KG, Hamburg, Germany
Terms of delivery and rights to technical change reserved.
Download newest version at www.trinamic.com

Bit Definitions	
Bit	Description
16	OUT0
17	OUT1

Table 146: Bit Definitions (2703_h)

Object Description			
Index	Name	Object Type	Data Type
2703_h	Device Digital Outputs	Variable	ARRAY

Table 147: Object Description (2703_h)

Entry Description					
Sub-index	Description	Access	PDO Mapping	Value Range	Default Value
1	Physical outputs	rw	yes	UNSIGNED32	0
2	Output mask	rw	yes	UNSIGNED32	0

Table 148: Entry Description (2703_h)

Note Output #0 can also be used for automatically controlling a brake that can be connected to the module via this output. In order to be able to control output #0 via this object the autmatic brake control function has to be disabled. Do this by writing 0 to sub-index 1 and sub-index 2 of object $200C_h$.

4.2.48 Object 2704_h: CAN Bit Rate

With this object it is possible to change the CAN bit rate. To do this, first write the new value to this object. Then, store the new setting by writing the save signature to object 2706h. After that, reset the module. The new setting then becomes active.

Object Description			
Index	Name	Object Type	Data Type
2704_h	CAN Bit Rate	Variable	UNSIGNED16

Table 149: Object Description (2704_h)

©2020 TRINAMIC Motion Control GmbH & Co. KG, Hamburg, Germany
Terms of delivery and rights to technical change reserved.
Download newest version at www.trinamic.com

Entry Description				
Sub-index	Access	PDO Mapping	Value Range	Default Value
0	rw	no	20,50,100,125,250,500,800,1000	1000

Table 150: Entry Description $(2704)_h$

How to change the bit rate of a module:

- Write new bit rate in object 2704_h.
- Write the save signature 65766173_h to sub-index 1 of object 2706_h.
- Reset module.

4.2.49 Object 2705_h: Node ID

On modules that do not have address switches the node ID can be selected using this object. On modules with address switches the node ID is normally selected using the address switches. Only when the address switches are set to an invalid value (0 or >127) this object overrides the address switch setting.
To change the node ID, first write the new node ID to this object. Then, store the new setting by writing the save signature to object 2706_h. After that, reset the module. The new setting then becomes active.

Object Description			
Index	Name	Object Type	Data Type
2705_h	Node ID	Variable	UNSIGNED8

Table 151: Object Description (2705_h)

Entry Description				
Sub-index	Access	PDO Mapping	Value Range	Default Value
0	rw	no	1…127	1

Table 152: Entry Description $(2705)_h$

How to change the node ID of a module:

- Write new node ID to object 2705_h.
- Write save signature 65766173_h to sub-index 1 of object 2706_h.
- Reset the module.

4.2.50 Object 2706_h: Store

Writing the save signature to this object permanently saves changes made to objects 2704_h and 2705_h. The save signature is 65766173_h.

©2020 TRINAMIC Motion Control GmbH & Co. KG, Hamburg, Germany
Terms of delivery and rights to technical change reserved.
Download newest version at www.trinamic.com

Object Description			
Index	Name	Object Type	Data Type
2706_h	Store	Variable	UNSIGNED32

Table 153: Object Description (2706_h)

Entry Description				
Sub-index	Access	PDO Mapping	Value Range	Default Value
0	rw	no	save signature: 65766173_h	1

Table 154: Entry Description $(2706)_h$

4.2.51 Object 2707_h: CAN Bit Rate Load

This object shows the selected CAN bit rate.

Object Description			
Index	Name	Object Type	Data Type
2707_h	CAN Bit Rate Load	Variable	UNSIGNED8

Table 155: Object Description (2707_h)

Entry Description				
Sub-index	Access	PDO Mapping	Value Range	Default Value
0	ro	no	20…1000	depends on bit rate

Table 156: Entry Description $(2707)_h$

4.2.52 Object 2708_h: Node ID Load

This object shows the selected node ID.

Object Description			
Index	Name	Object Type	Data Type
2708_h	Node ID Load	Variable	UNSIGNED8

Table 157: Object Description (2708_h)

©2020 TRINAMIC Motion Control GmbH & Co. KG, Hamburg, Germany
Terms of delivery and rights to technical change reserved.
Download newest version at www.trinamic.com

Entry Description				
Sub-index	Access	PDO Mapping	Value Range	Default Value
0	ro	no	1..127	Depends on node ID setting

Table 158: Entry Description (2708_h)

4.2.53 Object $270E_h$: Device Analog Inputs

This object shows the values of the analog inputs of the device.

Object Description			
Index	Name	Object Type	Data Type
$270E_h$	Device Analog Inputs	Array	UNSIGNED32

Table 159: Object Description ($270E_h$)

Entry Description					
Sub-index	Description	Access	PDO Mapping	Value Range	Default Value
1	Analog input 0	ro	yes	0…4095	–
2	Analog input 1	ro	yes	0…4095	–

Table 160: Entry Description ($270E_h$)

4.2.54 Object $5FFF_h$: Bootloader mode

Writing the magic number 12345678_h to this object switches the module to bootloader mode. This is only necessary for performing a firmware update.
This object always reads as zero.

Object Description			
Index	Name	Object Type	Data Type
$5FFF_h$	Bootloader mode	Variable	UNSIGNED32

Table 161: Object Description ($5FFF_h$)

Entry Description				
Sub-index	Access	PDO Mapping	Value Range	Default Value
0	rw	no	12345678_h	0

Table 162: Entry Description ($5FFF_h$)

©2020 TRINAMIC Motion Control GmbH & Co. KG, Hamburg, Germany
Terms of delivery and rights to technical change reserved.
Download newest version at www.trinamic.com

5 Profile specific Area

The profile segment contains CiA-402 standard motion control objects. These objects control the motion control functions of the TMCM-1231. Since it is not possible to operate the modes in parallel, the user is able to activate the required function by selecting a mode of operation. The control device writes to the modes of operation object in order to select the operation mode. The drive device provides the modes of operation display object to indicate the actual activated operation mode. Controlword, statusword, and set-points are used mode-specific. This implies the responsibility of the control device to avoid inconsistencies and erroneous behavior.
The following operating modes (selectable via object 6060_h, please see 5.1.6) are implemented on the TMCM-1231:

- Profile position mode (pp)
- Profile velocity mode (pv)
- Homing mode (hm)
- Cyclic position mode (csp)
- Cyclic velocity mode (csv)

5.1 Detailed Object Specifications

5.1.1 Object $605A_h$: Quick Stop Option Code

This object indicates what action is performed when the quick stop function is executed. The slow down ramp is the deceleration value of the used mode of operation. The following quick stop option codes are supported in the current version of the CANopen firmware:

Value Definition	
Value	Definition
1	Slow down on *slow down ramp* and transit into *switch on disabled*
2	Slow down on *quick stop ramp* and transit into *switch on disabled*
5	Slow down on *slow down ramp* and stay in *quick stop active*)
6	Slow down on *quick stop ramp* and stay in *quick stop active*

Table 163: Value Description ($605A_h$)

Object Description			
Index	Name	Object Type	Data Type
$605A_h$	Quick stop option code	Variable	SIGNED16

Table 164: Object Description ($605A_h$)

©2020 TRINAMIC Motion Control GmbH & Co. KG, Hamburg, Germany
Terms of delivery and rights to technical change reserved.
Download newest version at www.trinamic.com

Entry Description				
Sub-index	Access	PDO Mapping	Value Range	Default Value
0	rw	no	1/2/5/6	2

Table 165: Entry Description ($605A_h$)

5.1.2 Object $605B_h$: Shutdown Option Code

This object indicates what action is performed if there is a transition from *operation enabled* state to *ready to switch on state*. The shutdown option code always has the value 0 as only this is supported.

Value Definition	
Value	Definition
0	Disable drive function (switch off the power stage)

Table 166: Value Description ($605B_h$)

Object Description			
Index	Name	Object Type	Data Type
$605B_h$	Shutdown option code	Variable	UNSIGNED16

Table 167: Object Description ($605B_h$)

Entry Description				
Sub-index	Access	PDO Mapping	Value Range	Default Value
0	rw	no	0	0

Table 168: Entry Description ($605B_h$)

5.1.3 Object $605C_h$: Disable Operation Option Code

This object indicates what action is performed if there is a transition from *operation enabled* state to *switched on* state. The disable operation option code always has the value 1 as only this is supported. The slow down ramp is the deceleration value of the used mode of operation.

Value Definition	
Value	Definition
1	Slow down on slow down ramp

Table 169: Value Description ($605C_h$)

©2020 TRINAMIC Motion Control GmbH & Co. KG, Hamburg, Germany
Terms of delivery and rights to technical change reserved.
Download newest version at www.trinamic.com

Object Description			
Index	Name	Object Type	Data Type
$605C_h$	Disable operation option code	Variable	UNSIGNED16

Table 170: Object Description ($605C_h$)

Entry Description				
Sub-index	Access	PDO Mapping	Value Range	Default Value
0	rw	no	1	1

Table 171: Entry Description ($605C_h$)

5.1.4 Object $605D_h$: Halt Option Code

This object indicates what action is performed when the halt function is executed. The slow down ramp is the deceleration value of the used mode of operation.

Value Definition	
Value	Definition
1	Slow down on slow down ramp and stay in *operation enabled*

Table 172: Value Description ($605D_h$)

Object Description			
Index	Name	Object Type	Data Type
$605D_h$	Halt option code	Variable	UNSIGNED16

Table 173: Object Description ($605D_h$)

Entry Description				
Sub-index	Access	PDO Mapping	Value Range	Default Value
0	rw	no	1	1

Table 174: Entry Description ($605D_h$)

5.1.5 Object $605E_h$: Fault Reaction Option Code

This object indicates what action is performed when fault is detected in the power drive system. The slow down ramp is the deceleration value of the used mode of operation. The fault reaction option code always has the value 2 as only this is supported.

©2020 TRINAMIC Motion Control GmbH & Co. KG, Hamburg, Germany
Terms of delivery and rights to technical change reserved.
Download newest version at www.trinamic.com

Value Definition	
Value	Definition
2	Slow down on quick stop ramp

Table 175: Value Description ($605E_h$)

Object Description			
Index	Name	Object Type	Data Type
$605E_h$	Fault reaction option code	Variable	UNSIGNED16

Table 176: Object Description ($605E_h$)

Entry Description				
Sub-index	Access	PDO Mapping	Value Range	Default Value
0	rw	no	2	2

Table 177: Entry Description ($605E_h$)

5.1.6 Object 6060_h: Modes of Operation

This object indicates the requested operation mode. Supported operating modes are:

Value Definition	
Value	Mode
0	No mode
1	Profile position mode (pp)
3	Profile velocity mode (pv)
6	Homing mode (hm)
8	Cyclic synchronous position mode (csp)
9	Cyclic synchronous velocity mode (csv)

Table 178: Value Description (6060_h)

The motor will not run when the operating mode is set to 0. It will be stopped when the motor is running in one of the supported operating modes and the operating mode is then switched to 0.

©2020 TRINAMIC Motion Control GmbH & Co. KG, Hamburg, Germany
Terms of delivery and rights to technical change reserved.
Download newest version at www.trinamic.com

Object Description			
Index	Name	Object Type	Data Type
6060_h	Modes of operation	Variable	SIGNED8

Table 179: Object Description (6060_h)

Entry Description				
Sub-index	Access	PDO Mapping	Value Range	Default Value
0	rw	refer to CiA-402	see table 178	0

Table 180: Entry Description (6060_h)

Note It is not allowed to write the same mode number twice to object 6060_h. So before writing a new value to object 6060_h, either check object 6061_h or object 6060_h to see if the operating mode has not already been set to that value.

5.1.7 Object 6061_h: Modes of Operation Display

This object shows the operating mode that is currently set.

Value Definition	
Value	Mode
0	No mode
1	Profile position mode (pp)
3	Profile velocity mode (pv)
6	Homing mode (hm)
8	Cyclic synchronous position mode (csp)
9	Cyclic synchronous velocity mode (csv)

Table 181: Value Description (6061_h)

The motor will not run when the operating mode is set to 0. It will be stopped when the motor is running in one of the supported operating modes and the operating mode is then switched to 0.

Object Description			
Index	Name	Object Type	Data Type
6061_h	Modes of operation display	Variable	SIGNED8

Table 182: Object Description (6061_h)

©2020 TRINAMIC Motion Control GmbH & Co. KG, Hamburg, Germany
Terms of delivery and rights to technical change reserved.
Download newest version at www.trinamic.com

Entry Description				
Sub-index	Access	PDO Mapping	Value Range	Default Value
0	rw	refer to CiA-402	see table 181	0

Table 183: Entry Description (6061_h)

5.1.8 Object $606A_h$: Sensor Selection Code

This object provides the source of the position sensor actual value. It selects whether an encoder is to be used or not.

Value Definition	
Value	Mode
0	Encoder used
-1	No encoder

Table 184: Value Description ($606A_h$)

Object Description			
Index	Name	Object Type	Data Type
$606A_h$	Sensor selection code	Variable	SIGNED16

Table 185: Object Description ($606A_h$)

Entry Description				
Sub-index	Access	PDO Mapping	Value Range	Default Value
0	rw	no	0/-1	-1

Table 186: Entry Description ($606A_h$)

5.1.9 Object $608F_h$: Position Encoder Resolution

This object defines the resolution of the encoder. The position encoder resolution is calculated by the following formula:

$$position\ encoder\ resolution = \frac{encoder\ increments}{motor\ revolutions}$$

All values are dimensionless.

©2020 TRINAMIC Motion Control GmbH & Co. KG, Hamburg, Germany
Terms of delivery and rights to technical change reserved.
Download newest version at www.trinamic.com

Object Description			
Index	Name	Object Type	Data Type
$608F_h$	Position Encoder Resolution	Array	UNSIGNED32

Table 187: Object Description ($608F_h$)

Entry Description					
Sub-index	Description	Access	PDO Mapping	Value Range	Default Value
0	Highest sub-index supported	ro	no	2	2
1	Encoder increments	rw	no	0…2147483647	1
2	Motor revolutions	ro	no	1	1

Table 188: Entry Description ($608F_h$)

5.1.10 Object $60FD_h$: Digital Inputs

This object contains the states of the digital inputs of the module. Starting from bit 0, every bit reflects the state of one digital input. The number of valid bits depends on the number of digital inputs on the module used.

Object Description			
Index	Name	Object Type	Data Type
$60FD_h$	Digital inputs	Variable	UNSIGNED32

Table 189: Object Description ($60FD_h$)

Entry Description				
Sub-index	Access	PDO Mapping	Value Range	Default Value
0	rw	mappable	UNSIGNED32	0

Table 190: Entry Description ($60FD_h$)

5.1.11 Object 6502_h: Supported Drive Modes

This object provides information on the supported drive modes. A bit that is set means that the mode is supported, a bit that is not set means that the mode is not supported by the drive.

©2020 TRINAMIC Motion Control GmbH & Co. KG, Hamburg, Germany
Terms of delivery and rights to technical change reserved.
Download newest version at www.trinamic.com

Value Definition	
Bit	Mode
0	Profile position mode (pp)
1	Velocity mode (vl)
2	Profile velocity mode (pv)
3	Torque mode (tq)
4	Reserved
5	Homing mode (hm)
6	Interpolated position mode (ip)
7	Cyclic synchronous position mode (csp)
8	Cyclic synchronous velocity mode (csv)
9	Cyclic synchronous torque mode (cst)

Table 191: Value Definition (6502_h)

Object Description			
Index	Name	Object Type	Data Type
6502_h	Supported drive modes	Variable	UNSIGNED32

Table 192: Object Description (6502_h)

Entry Description				
Sub-index	Access	PDO Mapping	Value Range	Default Value
0	ro	no	UNSIGNED32	Depends on supported modes.

Table 193: Entry Description (6502_h)

©2020 TRINAMIC Motion Control GmbH & Co. KG, Hamburg, Germany
Terms of delivery and rights to technical change reserved.
Download newest version at www.trinamic.com

6 Profile Position Mode

A target position is applied to the trajectory generator. It is generating a position demand value for the position control loop described in the position control function.

Please refer to object 6060_h (section 5.1.6) for information about how to choose an operation mode. Object 6061_h (section 5.1.7) shows the operation mode that is set.

6.1 Detailed Object Specifications

The following text offers detailed object specifications. For a better understanding, it is necessary to see how the state machine works.

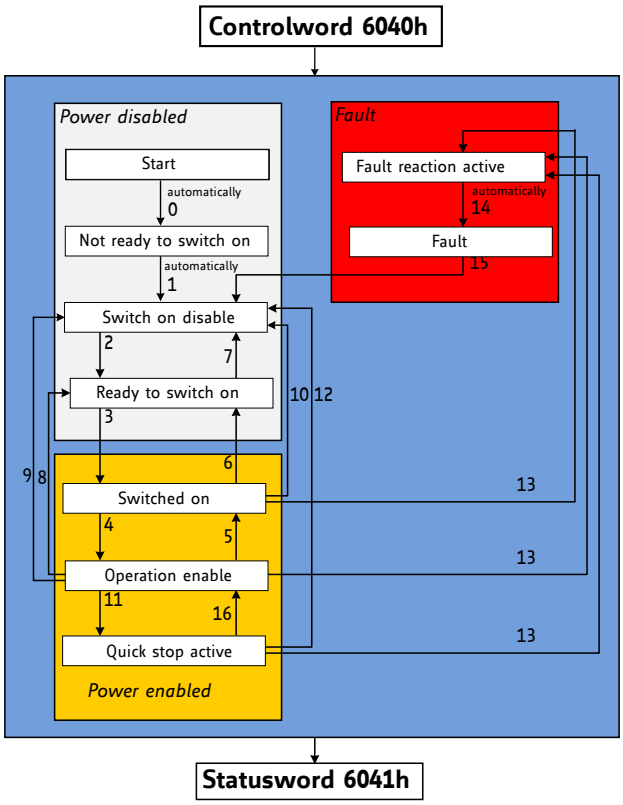

Figure 8: DS402 Finite State Machine

Notes on state transitions:

- Commands directing a change in state are processed completely and the new state achieved before additional state change commands are processed.
- Transitions 0 and 1 occur automatically at drive power-on or reset. Transition 14 occurs automatically, too. All other state changes must be directed by the host.
- Drive function disabled indicates that no current is being supplied to the motor.
- Drive function enabled indicates that current is available for the motor and profile position and profile velocity reference values may be processed.

©2020 TRINAMIC Motion Control GmbH & Co. KG, Hamburg, Germany
Terms of delivery and rights to technical change reserved.
Download newest version at www.trinamic.com

6.1.1 Object 6040_h: Control Word

This object indicates the received command controlling the power drive system finite state automaton (PDS FSA). The CiA-402 state machine can be controlled using this object. Please refer to figure 8 for detailed information.

Structure of the Control Word											
15	11	10	9	8	7	6	4	3	2	1	0
nu		r	oms	h	fr	oms		eo	qs	ev	so
MSB											LSB

Legend: nu=not used; r=reserved; oms=operation mode specific; h=halt; fr=fault reset; eo=enable operation; qs=quick stop; ev=enable voltage; so=switch on.

Table 194: Structure of the Control Word in pp Mode

Operation Mode specific Bits in pp Mode		
Bit	Name	Definition
4	New set point	0-to-1: the next positioning will be started.
5	Change immediately	Not supported.
6	Absolute / relative	0: New position is absolute. 1: New position is relative.
9	Change set point	Not supported.

Table 195: Operation Mode specific Bits in pp Mode

Command Coding						
Command	Bits of Control Word					Transitions
	Bit 7	Bit 3	Bit 2	Bit 1	Bit 0	
Shutdown	0	x	1	1	0	2,6,8
Switch on	0	0	1	1	1	3
Switch on & enable operation	0	1	1	1	1	3, 4
Disable voltage	0	x	x	0	x	7,9,10,12
Quick stop	0	x	0	1	x	7,10,11
Disable operation	0	0	1	1	1	5
Enable operation	0	1	1	1	1	4, 16
Fault reset	0-to-1	x	x	x	x	15

Table 196: Command Coding

©2020 TRINAMIC Motion Control GmbH & Co. KG, Hamburg, Germany
Terms of delivery and rights to technical change reserved.
Download newest version at www.trinamic.com

Object Description			
Index	Name	Object Type	Data Type
6040_h	Controlword	Variable	UNSIGNED16

Table 197: Object Description (6040_h in pp Mode)

Entry Description				
Sub-index	Access	PDO Mapping	Value Range	Default Value
0	rw	see CiA402-3	See command coding above.	

Table 198: Entry Description (6040_h in pp Mode)

6.1.2 Object 6041_h: Status Word

This object provides the status of the PDS FSA. It reflects the status of the CiA-402 state machine. Please refer to figure 8 for detailed information. The object is structured as defined below.
For more information about the coding please refer to the CANopen Drives and motion control device profile, part 2.

Structure of the Status Word															
15	14	13	12	11	10	9	8	7	6	5	4	3	2	1	0
dir	mot	oms		ila	tr	rm	ms	w	sod	qs	ve	f	oe	so	rtso
MSB															LSB

Legend: nu=not used; r=reserved; oms=operation mode specific; h=halt; fr=fault reset; oe=operation enable; qs=quick stop; ve=voltage enable; so=switch on.

Table 199: Structure of the Staus Word in pp Mode

Trinamic Specific Bits		
Bit	Name	Definition
14	Motor activity	0: Motor stands still. 1: Motor rotates.
15	Direction of rotation	This bit shows the direction of rotation.

Table 200: Trinamic Specific Bits

©2020 TRINAMIC Motion Control GmbH & Co. KG, Hamburg, Germany
Terms of delivery and rights to technical change reserved.
Download newest version at www.trinamic.com

Operation Mode specific Bits in pp Mode		
Bit	Name	Definition
10	Target reached	Set when the motor is within the position window.
12	Set point acknowledged	0: Set point processed. 1: Set point still in process.
13	Following error	Not supported.

Table 201: Operation Mode specific Bits in pp Mode

State Coding	
Status word	FSA state
xxxx xxxx x0xx 0000_h	Not ready to switch on
xxxx xxxx x1xx 0000_h	Switch on disabled
xxxx xxxx x01x 0001_h	Ready to switch on
xxxx xxxx x01x 0011_h	Switched on
xxxx xxxx x01x 0111_h	Operation enabled
xxxx xxxx x00x 0111_h	Quick stop active
xxxx xxxx x0xx 1111_h	Fault reaction active
xxxx xxxx x0xx 1000_h	Fault

Table 202: State Coding

Object Description			
Index	Name	Object Type	Data Type
6041_h	Controlword	Variable	UNSIGNED16

Table 203: Object Description (6041_h in pp Mode)

Entry Description				
Sub-index	Access	PDO Mapping	Value Range	Default Value
0	rw	see CiA402-3	See state coding above.	

Table 204: Entry Description (6041_h in pp Mode)

6.1.3 Object 6062_h: Position Demand Value

This object provides the demanded position value. The value is given in microsteps. Object 6062_h indicates the actual position that the motor should have. It is not to be confused with objects 6063_h and 6064_h.

©2020 TRINAMIC Motion Control GmbH & Co. KG, Hamburg, Germany
Terms of delivery and rights to technical change reserved.
Download newest version at www.trinamic.com

Object Description			
Index	Name	Object Type	Data Type
6062_h	Position Demand Value	Variable	SIGNED32

Table 205: Object Description (6062_h)

Entry Description				
Sub-index	Access	PDO Mapping	Value Range	Default Value
0	ro	Refer to CiA402-3	SIGNED32	no

Table 206: Entry Description (6062_h)

6.1.4 Object 6063_h: Position Actual Internal Value

This object provides the actual value of the encoder or the motor. Please use the sensor selection object $606A_h$ (see section 5.1.8) for selecting the motor or the encoder first. Object 6063_h indicates the actual position of the encoder or the motor, re-scaled to the microstep resolution. The value is given in microsteps.

Object Description			
Index	Name	Object Type	Data Type
6063_h	Position Actual Internal Value	Variable	SIGNED32

Table 207: Object Description (6063_h)

Entry Description				
Sub-index	Access	PDO Mapping	Value Range	Default Value
0	ro	Refer to CiA402-3	SIGNED32	no

Table 208: Entry Description (6063_h)

6.1.5 Object 6064_h: Position Actual Value

This object provides the actual value of the position measurement device. It always contains the same value as object 6063_h.

Object Description			
Index	Name	Object Type	Data Type
6064_h	Position Actual Value	Variable	SIGNED32

Table 209: Object Description (6064_h)

©2020 TRINAMIC Motion Control GmbH & Co. KG, Hamburg, Germany
Terms of delivery and rights to technical change reserved.
Download newest version at www.trinamic.com

Entry Description				
Sub-index	Access	PDO Mapping	Value Range	Default Value
0	ro	Refer to CiA402-3	SIGNED32	no

Table 210: Entry Description (6064_h)

6.1.6 Object 6065_h: Following Error Window

This object indicates the configured range of tolerated position values symmetrically to the position demand value. If the position actual value is out of the following error window, a following error occurs. A following error may occur when a drive is blocked, unreachable profile velocity occurs, or at wrong closed-loop coefficients. The value shall be given in microsteps.

When the difference between motor position (object 6062_h) and encoder position (object 6063_h or 6064_h) is greater than the value set here, the motor will be stopped and an emergency message will be sent. Setting this object to zero will turn off this feature completely.

Note Setting this object to a too low value will lead to false alarms.

Object Description			
Index	Name	Object Type	Data Type
6065_h	Following Error Window	Variable	UNSIGNED32

Table 211: Object Description (6065_h)

Entry Description				
Sub-index	Access	PDO Mapping	Value Range	Default Value
0	rw	no	0...2147483647	0

Table 212: Entry Description (6065_h)

6.1.7 Object 6067_h: Position Window

This object indicates the configured symmetrical range of accepted positions relative to the target position. If the actual value of the position encoder is within the position window, this target position is regarded as having been reached. The value is given in increments. If the value of the position window is $FFFFFFFF_h$, the position window control is switched off. If this object is set to zero, the target reached event will be signaled when the demand position (6062_h) has reached the target position (6064_h). When the position window is set to a value greater than zero, the target reached event will be signaled when the actual encoder position value (6064_h) is within $(target_position - position_window)$ and $(target_position + position_window)$.

©2020 TRINAMIC Motion Control GmbH & Co. KG, Hamburg, Germany
Terms of delivery and rights to technical change reserved.
Download newest version at www.trinamic.com

Object Description			
Index	Name	Object Type	Data Type
6067_h	Position Window	Variable	UNSIGNED32

Table 213: Object Description (6067_h)

Entry Description				
Sub-index	Access	PDO Mapping	Value Range	Default Value
0	rw	no	UNSIGNED32	$FFFFFFFF_h$

Table 214: Entry Description (6067_h)

6.1.8 Object 6068_h: Position Window Time

This object indicates the configured time, during which the actual position within the position window is measured. The value is given in ms. If this object is set to a value greater than zero and also the position window (6067_h) is set to a value greater than zero the target reached event will not be signaled until the actual position (6064_h) is at least as many milliseconds within the position window as defined by this object.

Object Description			
Index	Name	Object Type	Data Type
6068_h	Position Window Time	Variable	UNSIGNED16

Table 215: Object Description (6068_h)

Entry Description				
Sub-index	Access	PDO Mapping	Value Range	Default Value
0	rw	no	UNSIGNED16	0

Table 216: Entry Description (6068_h)

6.1.9 Object $606C_h$: Velocity Actual Value

This object shows the actual velocity value of the motor. The value is given in internal or user-defined velocity units (depending on object $208C_h$, described in section 4.2.19).

Object Description			
Index	Name	Object Type	Data Type
$606C_h$	Velocity Actual Value	Variable	SIGNED32

Table 217: Object Description ($606C_h$)

©2020 TRINAMIC Motion Control GmbH & Co. KG, Hamburg, Germany
Terms of delivery and rights to technical change reserved.
Download newest version at www.trinamic.com

Entry Description				
Sub-index	Access	PDO Mapping	Value Range	Default Value
0	ro	Refer to CiA402-3	SIGNED32	no

Table 218: Entry Description ($606C_h$)

6.1.10 Object $607A_h$: Target Position

The target position is the position that the drive should move to in profile position mode using the current settings of motion control parameters (such as velocity, acceleration, deceleration, motion profile type etc.). The value of this object is interpreted as absolute or relative depending on the abs/rel flag in the controlword. It is given in microsteps.

Object Description			
Index	Name	Object Type	Data Type
$607A_h$	Target Position	Variable	SIGNED32

Table 219: Object Description ($607A_h$ in pp Mode)

Entry Description				
Sub-index	Access	PDO Mapping	Value Range	Default Value
0	rw	Refer to CiA402-3	SIGNED32	0

Table 220: Entry Description ($607A_h$ in pp Mode)

6.1.11 Object $607D_h$: Software Position Limit

This object indicates the configured maximal and minimal software position limits. These parameters define the absolute position limits for the position demand value and the position actual value. Every new target position is checked against these limits. The limit positions are always relative to the machine home position. Before being compared with the target position, they are corrected internally by the home offset as follows:

$$Corrected_min_position_limit = min_position_limit - home_offset$$
$$Corrected_max_position_limit = max_position_limit - home_offset$$

Object Description			
Index	Name	Object Type	Data Type
$607D_h$	Software Position Limit	Array	SIGNED32

Table 221: Object Description ($607D_h$)

©2020 TRINAMIC Motion Control GmbH & Co. KG, Hamburg, Germany
Terms of delivery and rights to technical change reserved.
Download newest version at www.trinamic.com

Entry Description					
Sub-index	Description	Access	PDO Mapping	Value Range	Default Value
1	Mininmum Position Limit	rw	no	SIGNED32	-2147483648
2	Maximum Position Limit	rw	no	SIGNED32	2147483647

Table 222: Entry Description ($607D_h$)

6.1.12 Object 6081_h: Profile Velocity

This object indicates the configured velocity normally attained at the end of the acceleration ramp during a profiled motion and is valid for both directions of motion. The profile velocity is the maximum velocity used when driving to a new position. It is given in internal or user specific units (depending on object $208C_h$, section 4.2.19).

Object Description			
Index	Name	Object Type	Data Type
6081_h	Profile Velocity	Variable	UNSIGNED32

Table 223: Object Description (6081_h)

Entry Description				
Sub-index	Access	PDO Mapping	Value Range	Default Value
0	rw	no	UNSIGNED32	0

Table 224: Entry Description (6081_h)

6.1.13 Object 6082_h: End Velocity

This object indicates the configured velocity normally attained at the end of the deceleration ramp during a profiled motion and is valid for both directions of motion. The end velocity is the velocity used when reaching the new position. It is given in internal or user specific units (depending on object $208C_h$, section 4.2.19).

Object Description			
Index	Name	Object Type	Data Type
6082_h	End Velocity	Variable	UNSIGNED32

Table 225: Object Description (6082_h)

Entry Description				
Sub-index	Access	PDO Mapping	Value Range	Default Value
0	rw	no	UNSIGNED32	0

Table 226: Entry Description (6082_h)

©2020 TRINAMIC Motion Control GmbH & Co. KG, Hamburg, Germany
Terms of delivery and rights to technical change reserved.
Download newest version at www.trinamic.com

6.1.14 Object 6083_h: Profile Acceleration

This object indicates the configured acceleration. Object 6083_h sets the maximum acceleration to be used in profile positioning and in profile velocity mode.
The units for object 6083_h can be choosen with object $208E_h$, described in section 4.2.20.

Object Description			
Index	Name	Object Type	Data Type
6083_h	Profile Acceleration	Variable	UNSIGNED32

Table 227: Object Description (6083_h)

Entry Description				
Sub-index	Access	PDO Mapping	Value Range	Default Value
0	rw	no	UNSIGNED32	0

Table 228: Entry Description (6083_h)

6.1.15 Object 6084_h: Profile Deceleration

This object indicates the configured deceleration. Object 6084_h sets the maximum deceleration to be used in profile positioning mode and in profile velocizy mode.
The units for object 6084_h can be choosen with object $208E_h$, described in section 4.2.20.

Object Description			
Index	Name	Object Type	Data Type
6084_h	Profile Deceleration	Variable	UNSIGNED32

Table 229: Object Description (6084_h)

Entry Description				
Sub-index	Access	PDO Mapping	Value Range	Default Value
0	rw	no	UNSIGNED32	0

Table 230: Entry Description (6084_h)

6.1.16 Object 6085_h: Quick Stop Deceleration

This object indicates the configured deceleration used to stop the motor when the quick stop function is activated and the quick stop code object $605A_h$ is set to 2 (or 6). The value is given in the same unit as profile acceleration object 6083_h.

©2020 TRINAMIC Motion Control GmbH & Co. KG, Hamburg, Germany
Terms of delivery and rights to technical change reserved.
Download newest version at www.trinamic.com

Object Description			
Index	Name	Object Type	Data Type
6085_h	Quick stop deceleration	Variable	UNSIGNED32

Table 231: Object Description (6085_h)

Entry Description				
Sub-index	Access	PDO Mapping	Value Range	Default Value
0	rw	no	UNSIGNED32	51200

Table 232: Entry Description (6085_h)

6.1.17 Object 6086_h: Motion Profile Type

This object indicates the configured type of motion profile used to perform a profiled motion. Set this object to 0 to select trapezoid ramps or to 1 for S-shaped ramps.

Value Definition	
Value	Definition
0	Linear (six-point) ramp, trapezoidal profile
1	S-shaped ramp, defined by object $60A4_h$ (section 6.1.18)

Table 233: Value Definitions of Object 6086_h

Object Description			
Index	Name	Object Type	Data Type
6086_h	Motion profile type	Variable	UNSIGNED16

Table 234: Object Description (6086_h)

Entry Description				
Sub-index	Access	PDO Mapping	Value Range	Default Value
0	rw	no	0/1	0

Table 235: Entry Description (6086_h)

6.1.18 Object $60A4_h$: Profile Jerk

This object indicates the configured set of jerk parameters that shall be used during the profile movement. The bow of S-shaped ramps is set here. Object $60A4_h$ can only be used when S-shaped ramps are selected by setting object 6086_h (section 6.1.17) to 1.

©2020 TRINAMIC Motion Control GmbH & Co. KG, Hamburg, Germany
Terms of delivery and rights to technical change reserved.
Download newest version at www.trinamic.com

Note The TMC4361 motion controller used on the TMCM-1231 module also offers bow values higher than the 32 bit range. Under most circumstances, the normal 32 bit value range is sufficient. Use object 2015_h if higher values are required.

Object Description			
Index	Name	Object Type	Data Type
$60A4_h$	Profile Jerk	Array	UNSIGNED32

Table 236: Object Description ($60A4_h$)

Entry Description					
Sub-index	Description	Access	PDO Mapping	Value Range	Default Value
0	Highest sub-index supported	ro	no	4	4
1	Profile jerk 1	rw	no	0...2147483647	0
2	Profile jerk 2	rw	no	0...2147483647	0
3	Profile jerk 3	rw	no	0...2147483647	0
4	Profile jerk 4	rw	no	0...2147483647	0

Table 237: Entry Description ($60A4_h$)

6.1.19 Object $60F2_h$: Positioning Option Code

This object indicates the positioning behaviour in profile position mode. Only bits 0 and 1 (relative option) are supported.

Bit Definitions		
Bit 1	Bit 0	Definition
0	0	Positioning moves shall be performed relative to the preceding (internal absolute) target position.
0	1	Positioning moves shall be performed relative to the actual position demand value (object 6063_h).
1	0	Positioning moves shall be performed relative to the position actual value (object 6064_h).
1	1	reserved

Table 238: Bit Definitions of Object $60F2_h$

©2020 TRINAMIC Motion Control GmbH & Co. KG, Hamburg, Germany
Terms of delivery and rights to technical change reserved.
Download newest version at www.trinamic.com

Object Description			
Index	Name	Object Type	Data Type
$60F2_h$	Positioning option code	Variable	UNSIGNED16

Table 239: Object Description ($60F2_h$)

Entry Description				
Sub-index	Access	PDO Mapping	Value Range	Default Value
0	rw	no	UNSIGNED16	0

Table 240: Entry Description ($60F2_h$)

6.2 How to move a Motor in pp Mode

Here is a little example that shows how to get a motor running in pp mode. In this little example we assume that the module has been reset (and then switched to pre-operational or operational) by NMT commands before. Please note that the values are decimal.

- If you do not have any limit switches connected, first disable the limit switch inputs by writing 3 to object 2005_h.
- Select pp mode by writing 1 to object 6060_h.
- Write 6 to object 6040_h to switch to READY_TO_SWITCH_ON state.
- Write 7 to object 6040_h to switch to SWITCHED_ON state.
- Write 15 to object 6040_h to switch to OPERATION_ENABLED state.
- Write the desired target position (e.g. 500000) to object $607A_h$.
- Mark the new target position as active by writing 31 to object 6040_h. The motor starts moving now.
- Reset the activation by writing 15 to object 6040_h (this can be done while the motor is still moving).

©2020 TRINAMIC Motion Control GmbH & Co. KG, Hamburg, Germany
Terms of delivery and rights to technical change reserved.
Download newest version at www.trinamic.com

7 Profile Velocity Mode

The profile velocity mode is used to control the velocity of the drive without a special regard of the position. It contains limit functions and trajectory generation.

The profile velocity mode covers the following sub-functions:

- Demand value input via trajectory generator.
- Monitoring of the profile velocity using a window-function.
- Monitoring of velocity actual value using a threshold.

The operation of the reference value generator and its input parameters include:

- Profile velocity
- Profile acceleration
- Profile deceleration
- Emergency stop
- Motion profile type

7.1 Detailed Object Specifications

7.1.1 Object 6040_h: Control Word

This object indicates the received command controlling the power drive system finite state automaton (PDS FSA). The CiA-402 state machine can be controlled using this object. Please refer to figure 8 for detailed information.

In pv mode the control word does not contain any operation mode specific bits.

Structure of the Control Word											
15	11	10	9	8	7	6	4	3	2	1	0
nu		r	r	h	fr	r		eo	qs	ev	so
MSB											LSB

Legend: nu=not used; r=reserved; h=halt; fr=fault reset; eo=enable operation; qs=quick stop; ev=enable voltage; so=switch on.

Table 241: Structure of the Control Word in pv Mode

©2020 TRINAMIC Motion Control GmbH & Co. KG, Hamburg, Germany
Terms of delivery and rights to technical change reserved.
Download newest version at www.trinamic.com

Command Coding						
Command	Bits of Control Word					Transitions
	Bit 7	Bit 3	Bit 2	Bit 1	Bit 0	
Shutdown	0	x	1	1	0	2,6,8
Switch on	0	0	1	1	1	3
Switch on & enable operation	0	1	1	1	1	3, 4
Disable voltage	0	x	x	0	x	7,9,10,12
Quick stop	0	x	0	1	x	7,10,11
Disable operation	0	0	1	1	1	5
Enable operation	0	1	1	1	1	4, 16
Fault reset	0-to-1	x	x	x	x	15

Table 242: Command Coding

Object Description			
Index	Name	Object Type	Data Type
6040_h	Controlword	Variable	UNSIGNED16

Table 243: Object Description (6040_h in pv Mode)

Entry Description				
Sub-index	Access	PDO Mapping	Value Range	Default Value
0	rw	see CiA402-3	See command coding above.	

Table 244: Entry Description (6040_h in pv Mode)

7.1.2 Object 6041_h: Status Word

This object provides the status of the PDS FSA. It reflects the status of the CiA-402 state machine. Please refer to figure 8 for detailed information. The object is structured as defined below.
For more information about the coding please refer to the CANopen Drives and motion control device profile, part 2.

Structure of the Status Word															
15	14	13	12	11	10	9	8	7	6	5	4	3	2	1	0
dir	mot	oms		ila	tr	rm	ms	w	sod	qs	ve	f	oe	so	rtso
MSB															LSB

Legend: nu=not used; r=reserved; oms=operation mode specific; h=halt; fr=fault reset; oe=operation enable; qs=quick stop; ve=voltage enable; so=switch on.

Table 245: Structure of the Status Word in pv Mode

©2020 TRINAMIC Motion Control GmbH & Co. KG, Hamburg, Germany
Terms of delivery and rights to technical change reserved.
Download newest version at www.trinamic.com

Trinamic Specific Bits		
Bit	Name	Definition
14	Motor activity	0: Motor stands still. 1: Motor rotates.
15	Direction of rotation	This bit shows the direction of rotation.

Table 246: Trinamic Specific Bits

Operation Mode specific Bits in pv Mode		
Bit	Name	Definition
10	Target reached	Indicates that the target speed has been reached.
12	Speed	Not supported.
13	Max. slippage error	Not supported.

Table 247: Operation Mode specific Bits in pv Mode

State Coding	
Status word	FSA state
xxxx xxxx x0xx 0000_h	Not ready to switch on
xxxx xxxx x1xx 0000_h	Switch on disabled
xxxx xxxx x01x 0001_h	Ready to switch on
xxxx xxxx x01x 0011_h	Switched on
xxxx xxxx x01x 0111_h	Operation enabled
xxxx xxxx x00x 0111_h	Quick stop active
xxxx xxxx x0xx 1111_h	Fault reaction active
xxxx xxxx x0xx 1000_h	Fault

Table 248: State Coding

Object Description			
Index	Name	Object Type	Data Type
6041_h	Controlword	Variable	UNSIGNED16

Table 249: Object Description (6041_h in pv Mode)

©2020 TRINAMIC Motion Control GmbH & Co. KG, Hamburg, Germany
Terms of delivery and rights to technical change reserved.
Download newest version at www.trinamic.com

Entry Description				
Sub-index	Access	PDO Mapping	Value Range	Default Value
0	rw	see CiA402-3	See state coding above	

Table 250: Entry Description (6041_h in pv Mode)

7.1.3 Object 6062_h: Position Demand Value

This object provides the demanded position value. The value is given in microsteps. Object 6062_h indicates the actual position that the motor should have. It is not to be confused with objects 6063_h and 6064_h.

Object Description			
Index	Name	Object Type	Data Type
6062_h	Position Demand Value	Variable	SIGNED32

Table 251: Object Description (6062_h)

Entry Description				
Sub-index	Access	PDO Mapping	Value Range	Default Value
0	ro	Refer to CiA402-3	SIGNED32	no

Table 252: Entry Description (6062_h)

7.1.4 Object 6063_h: Position Actual Internal Value

This object provides the actual value of the encoder or the motor. Please use the sensor selection object $606A_h$ (see section 5.1.8) for selecting the motor or the encoder first. Object 6063_h indicates the actual position of the encoder or the motor, re-scaled to the microstep resolution. The value is given in microsteps.

Object Description			
Index	Name	Object Type	Data Type
6063_h	Position Actual Internal Value	Variable	SIGNED32

Table 253: Object Description (6063_h)

Entry Description				
Sub-index	Access	PDO Mapping	Value Range	Default Value
0	ro	Refer to CiA402-3	SIGNED32	no

Table 254: Entry Description (6063_h)

©2020 TRINAMIC Motion Control GmbH & Co. KG, Hamburg, Germany
Terms of delivery and rights to technical change reserved.
Download newest version at www.trinamic.com

7.1.5 Object 6064_h: Position Actual Value

This object provides the actual value of the position measurement device. It always contains the same value as object 6063_h.

Object Description			
Index	Name	Object Type	Data Type
6064_h	Position Actual Value	Variable	SIGNED32

Table 255: Object Description (6064_h)

Entry Description				
Sub-index	Access	PDO Mapping	Value Range	Default Value
0	ro	Refer to CiA402-3	SIGNED32	no

Table 256: Entry Description (6064_h)

7.1.6 Object 6065_h: Following Error Window

This object indicates the configured range of tolerated position values symmetrically to the position demand value. If the position actual value is out of the following error window, a following error occurs. A following error may occur when a drive is blocked, unreachable profile velocity occurs, or at wrong closed-loop coefficients. The value shall be given in microsteps.

When the difference between motor position (object 6062_h) and encoder position (object 6063_h or 6064_h) is greater than the value set here, the motor will be stopped and an emergency message will be sent. Setting this object to zero will turn off this feature completely.

Note Setting this object to a too low value will lead to false alarms.

Object Description			
Index	Name	Object Type	Data Type
6065_h	Following Error Window	Variable	UNSIGNED32

Table 257: Object Description (6065_h)

Entry Description				
Sub-index	Access	PDO Mapping	Value Range	Default Value
0	rw	no	0…2147483647	0

Table 258: Entry Description (6065_h)

©2020 TRINAMIC Motion Control GmbH & Co. KG, Hamburg, Germany
Terms of delivery and rights to technical change reserved.
Download newest version at www.trinamic.com

7.1.7 Object $606C_h$: Velocity Actual Value

This object shows the actual velocity value of the motor. The value is given in internal or user-defined velocity units (depending on object $208C_h$, described in section 4.2.19).

Object Description			
Index	Name	Object Type	Data Type
$606C_h$	Velocity Actual Value	Variable	SIGNED32

Table 259: Object Description ($606C_h$)

Entry Description				
Sub-index	Access	PDO Mapping	Value Range	Default Value
0	ro	Refer to CiA402-3	SIGNED32	no

Table 260: Entry Description ($606C_h$)

7.1.8 Object $607D_h$: Software Position Limit

This object indicates the configured maximal and minimal software position limits. These parameters define the absolute position limits for the position demand value and the position actual value. Every new target position is checked against these limits. The limit positions are always relative to the machine home position. Before being compared with the target position, they are corrected internally by the home offset as follows:

$$Corrected_min_position_limit = min_position_limit - home_offset$$
$$Corrected_max_position_limit = max_position_limit - home_offset$$

Object Description			
Index	Name	Object Type	Data Type
$607D_h$	Software Position Limit	Array	SIGNED32

Table 261: Object Description ($607D_h$)

Entry Description					
Sub-index	Description	Access	PDO Mapping	Value Range	Default Value
1	Mininmum Position Limit	rw	no	SIGNED32	-2147483648
2	Maximum Position Limit	rw	no	SIGNED32	2147483647

Table 262: Entry Description ($607D_h$)

©2020 TRINAMIC Motion Control GmbH & Co. KG, Hamburg, Germany
Terms of delivery and rights to technical change reserved.
Download newest version at www.trinamic.com

7.1.9 Object 6083_h: Profile Acceleration

This object indicates the configured acceleration. Object 6083_h sets the maximum acceleration to be used in profile positioning and in profile velocity mode.
The units for object 6083_h can be choosen with object $208E_h$, described in section 4.2.20.

Object Description			
Index	Name	Object Type	Data Type
6083_h	Profile Acceleration	Variable	UNSIGNED32

Table 263: Object Description (6083_h)

Entry Description				
Sub-index	Access	PDO Mapping	Value Range	Default Value
0	rw	no	UNSIGNED32	0

Table 264: Entry Description (6083_h)

7.1.10 Object 6084_h: Profile Deceleration

This object indicates the configured deceleration. Object 6084_h sets the maximum deceleration to be used in profile positioning mode and in profile velocizy mode.
The units for object 6084_h can be choosen with object $208E_h$, described in section 4.2.20.

Object Description			
Index	Name	Object Type	Data Type
6084_h	Profile Deceleration	Variable	UNSIGNED32

Table 265: Object Description (6084_h)

Entry Description				
Sub-index	Access	PDO Mapping	Value Range	Default Value
0	rw	no	UNSIGNED32	0

Table 266: Entry Description (6084_h)

7.1.11 Object 6085_h: Quick Stop Deceleration

This object indicates the configured deceleration used to stop the motor when the quick stop function is activated and the quick stop code object $605A_h$ is set to 2 (or 6). The value is given in the same unit as profile acceleration object 6083_h.

©2020 TRINAMIC Motion Control GmbH & Co. KG, Hamburg, Germany
Terms of delivery and rights to technical change reserved.
Download newest version at www.trinamic.com

Object Description			
Index	Name	Object Type	Data Type
6085_h	Quick stop deceleration	Variable	UNSIGNED32

Table 267: Object Description (6085_h)

Entry Description				
Sub-index	Access	PDO Mapping	Value Range	Default Value
0	rw	no	UNSIGNED32	51200

Table 268: Entry Description (6085_h)

7.1.12 Object 6086_h: Motion Profile Type

This object indicates the configured type of motion profile used to perform a profiled motion. Set this object to 0 to select trapezoid ramps or to 1 for S-shaped ramps.

Value Definition	
Value	Definition
0	Linear (six-point) ramp, trapezoidal profile
1	S-shaped ramp, defined by object $60A4_h$ (section 7.1.13)

Table 269: Value Definitions of Object 6086_h

Object Description			
Index	Name	Object Type	Data Type
6086_h	Motion profile type	Variable	UNSIGNED16

Table 270: Object Description (6086_h)

Entry Description				
Sub-index	Access	PDO Mapping	Value Range	Default Value
0	rw	no	0/1	0

Table 271: Entry Description (6086_h)

7.1.13 Object $60A4_h$: Profile Jerk

This object indicates the configured set of jerk parameters that shall be used during the profile movement. The bow of S-shaped ramps is set here. Object $60A4_h$ can only be used when S-shaped ramps are selected by setting object 6086_h (section 7.1.12) to 1.

©2020 TRINAMIC Motion Control GmbH & Co. KG, Hamburg, Germany
Terms of delivery and rights to technical change reserved.
Download newest version at www.trinamic.com

Note The TMC4361 motion controller used on the TMCM-1231 module also offers bow values higher than the 32 bit range. Under most circumstances, the normal 32 bit value range is sufficient. Use object 2015_h if higher values are required.

Object Description			
Index	Name	Object Type	Data Type
$60A4_h$	Profile Jerk	Array	UNSIGNED32

Table 272: Object Description ($60A4_h$)

Entry Description					
Sub-index	Description	Access	PDO Mapping	Value Range	Default Value
0	Highest sub-index supported	ro	no	4	4
1	Profile jerk 1	rw	no	0...2147483647	0
2	Profile jerk 2	rw	no	0...2147483647	0
3	Profile jerk 3	rw	no	0...2147483647	0
4	Profile jerk 4	rw	no	0...2147483647	0

Table 273: Entry Description ($60A4_h$)

7.1.14 Object $60FF_h$: Target Velocity

This object indicates the configured target velocity and is used as input for the trajectory generator. Object $60FF_h$ sets the target velocity when using profile velocity mode. The drive then accelerates or decelerates to that velocity using the acceleration and deceleration set by objects 6083_h and 6084_h. The values are given in units which can be selected with object $208C_h$, described in section 4.2.19.

Object Description			
Index	Name	Object Type	Data Type
$60FF_h$	Target Velocity	Variable	SIGNED32

Table 274: Object Description ($60FF_h$)

Entry Description				
Sub-index	Access	PDO Mapping	Value Range	Default Value
0	rw	see CiA402-3	SIGNED32	0

Table 275: Entry Description ($60FF_h$)

©2020 TRINAMIC Motion Control GmbH & Co. KG, Hamburg, Germany
Terms of delivery and rights to technical change reserved.
Download newest version at www.trinamic.com

7.2 How to move a Motor in pv Mode

Here is a little example that shows how to get a motor running in pv mode. In this little example we assume that the module has been reset (and then switched to pre-operational or operational) by NMT commands before.

- If you do not have any limit switches connected, first disable the limit switch inputs by writing 3 to object 2005_h.
- Select pv mode by writing 3 to object 6060_h.
- Write 6 to object 6040_h to switch to READY_TO_SWITCH_ON state.
- Write 7 to object 6040_h to switch to SWITCHED_ON state.
- Write 15 to object 6040_h to switch to OPERATION_ENABLED state.
- Write the desired target speed (e.g. 100000) to object $60FF_h$. The motor now accelerates to that speed.
- Stop the motor by writing 0 to object $60FF_h$.

©2020 TRINAMIC Motion Control GmbH & Co. KG, Hamburg, Germany
Terms of delivery and rights to technical change reserved.
Download newest version at www.trinamic.com

8 Homing Mode

This chapter describes the method by which a drive seeks the home position (reference point). There are various methods of achieving this using limit switches at the ends of travel or a home switch in mid-travel. Some methods also use the index (zero) pulse train from an incremental encoder. The user may specify the speeds, acceleration and the method of homing.

There is no output data except for those bits in the statusword which return the status or result of the homing process and the demand to the position control loops.

There are four sources of the homing signal available: these are positive and negative limit switches, the home switch and the index pulse from an encoder.

Figure 9 shows the defined input objects as well as the output objects. The user can specify the speeds, acceleration and method of homing. The home offset object $607C_h$ allows displacing the zero in point the coordinate system for the home position.

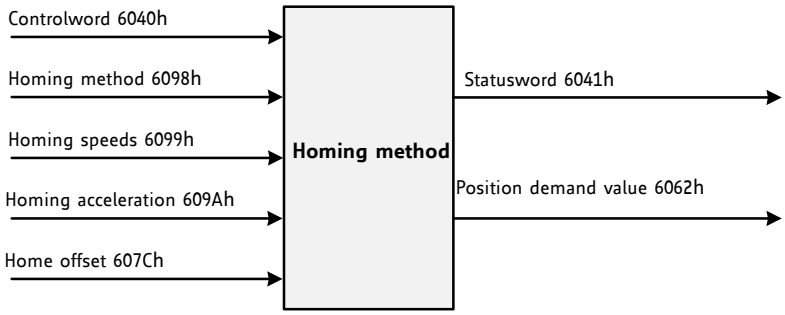

Figure 9: Homing Mode Function

Choosing a homing mode determines the following things:

- The homing signal (positive limit switch, negative limit switch, and home switch).
- The direction of actuation where appropriate.
- The position of the index pulse.

The home position and the zero position are offset by the home offset (see object $607C_h$, section 8.2.4).

Depending on the module there are different sources of homing methods available:

- Negative and positive limit switches.
- Home switch.
- Index pulse of an encoder.

For the operation of positioning drives, an exact knowledge of the absolute position is normally required. Since for cost reasons drives often do not have an absolute encoder, a homing operation is necessary.

©2020 TRINAMIC Motion Control GmbH & Co. KG, Hamburg, Germany
Terms of delivery and rights to technical change reserved.
Download newest version at www.trinamic.com

8.1 Homing Methods

The TMCM-1231 supports a subset of different standard CANopen homing methods. The homing method that is to be used can be choosen via object 6098_h (section 8.2.5).

Supported Homing Methods	
Method	Description
0	No homing (default value for object 6098_h).
1	Search the left end switch, then search the next encoder index pulse.
2	Search the right end switch, then search the next encoder index pulse.
3	Search the positive edge of the home switch, then search the next encoder index pulse.
5	Search the negative edge of the home switch, then search the next encoder index pulse.
17	Search the left end switch.
18	Search the right end switch.
19	Search the positive edge of the home switch.
21	Search the negative edge of the home switch.
33	Search next index pulse in negative direction.
34	Search next index pulse in positive direction.
35	The actual position is used as home position. All position values (objects 6062h, 6063h, and 6064h) are set to zero, but the motor will not move.

Table 276: Supported CANopen Homing Methods

When using homing methods that need end switch inputs or home switch inputs please take care of their configuration (object 2005_h, section 4.2.6).

8.1.1 Homing Method 1: Homing on negative Limit Switch and Index Pulse

Using this method, the initial direction of movement shall be leftward if the negative limit switch is inactive (here: low). The home position shall be at the first index pulse to the right of the position where the negative limit switch becomes inactive.

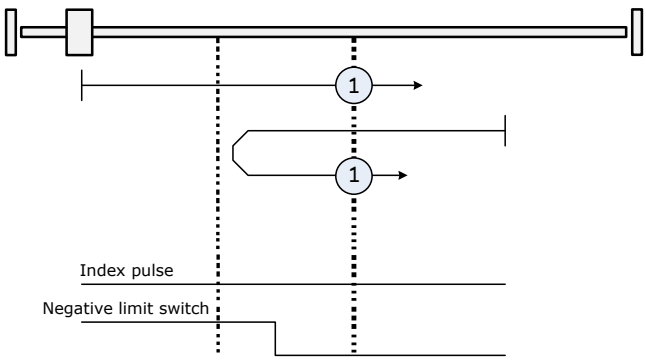

Figure 10: Homing Method 1

©2020 TRINAMIC Motion Control GmbH & Co. KG, Hamburg, Germany
Terms of delivery and rights to technical change reserved.
Download newest version at www.trinamic.com

8.1.2 Homing Method 2: Homing on positive Limit Switch and Index Pulse

Using this method, the initial direction of movement shall be rightward if the positive limit switch is inactive (here: low). The position of home shall be at the first index pulse to the left of the position where the positive limit switch becomes inactive.

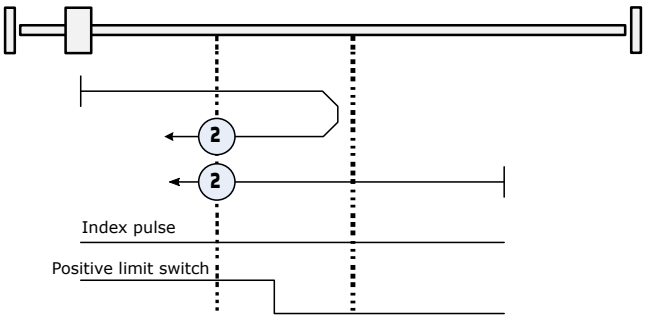

Figure 11: Homing Method 2

8.1.3 Homing Method 3: Homing on positive Home Switch and Index Pulse

Using this method, the initial direction of movement shall be dependent on the state of the home switch. The home position shall be at the index pulse to either to the left or the right of the point where the home switch changes state. If the initial position is situated so that the direction of movement shall reverse during homing, the point at which the reversal takes place is anywhere after a change of state of the home switch.

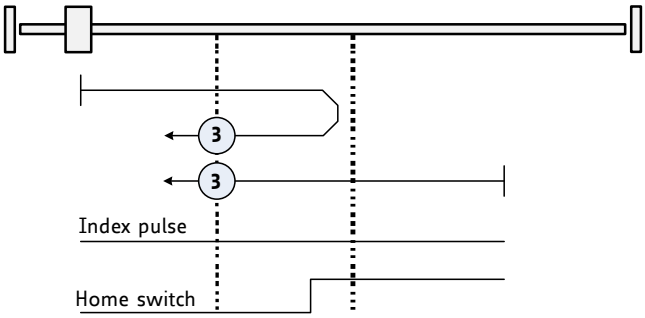

Figure 12: Homing Method 3

8.1.4 Homing Method 5: Homing on negative Home Switch and Index Pulse

Using this method, the initial direction of movement shall be dependent on the state of the home switch. The home position shall be at the index pulse to either to the left or the right of the point where the home switch changes state. If the initial position is situated so that the direction of movement shall reverse during homing, the point at which the reversal takes place is anywhere after a change of state of the home switch.

©2020 TRINAMIC Motion Control GmbH & Co. KG, Hamburg, Germany
Terms of delivery and rights to technical change reserved.
Download newest version at www.trinamic.com

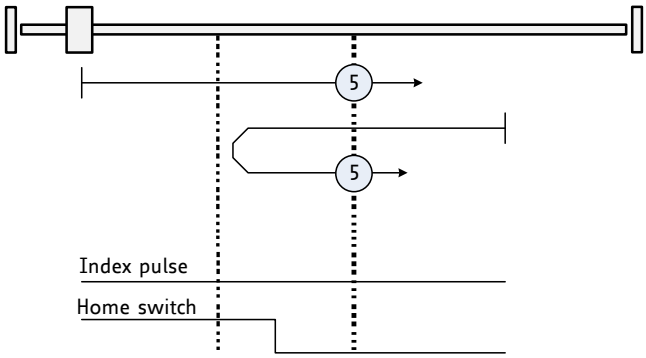

Figure 13: Homing Method 5

8.1.5 Homing Method 17: Homing on negative Limit Switch

Using this method, the initial direction of movement shall be leftward if the negative limit switch is inactive (here: low). The home position shall at the point where the negative limit switch becomes inactive.

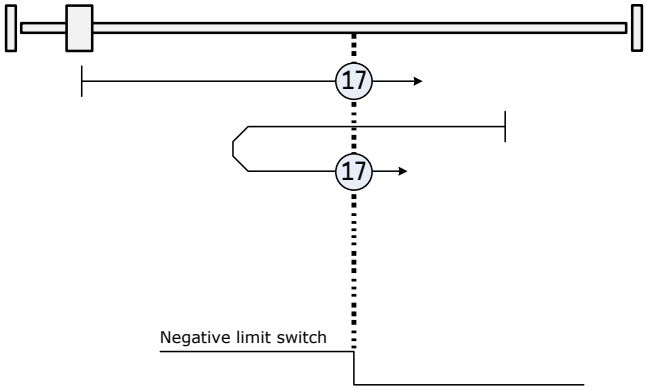

Figure 14: Homing Method 17

8.1.6 Homing Method 18: Homing on positive Limit Switch

Using this method, the initial direction of movement shall be rightward if the positive limit switch is inactive (here: low). The home position shall be at point the where the positive limit switch becomes inactive.

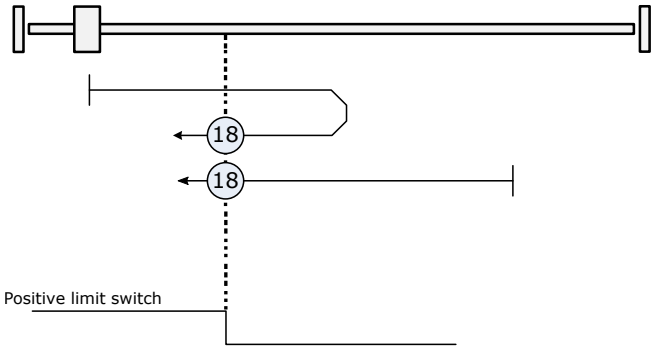

Figure 15: Homing Method 18

©2020 TRINAMIC Motion Control GmbH & Co. KG, Hamburg, Germany
Terms of delivery and rights to technical change reserved.
Download newest version at www.trinamic.com

8.1.7 Homing Method 19: Homing on positive Home Switch

Using this method, the initial direction of movement shall be dependent on the state of the home switch. The home position shall be at the point where the home switch changes state. If the initial direction of movement leads away from the home switch, the drive shall reverse on encountering the relevant limit switch.

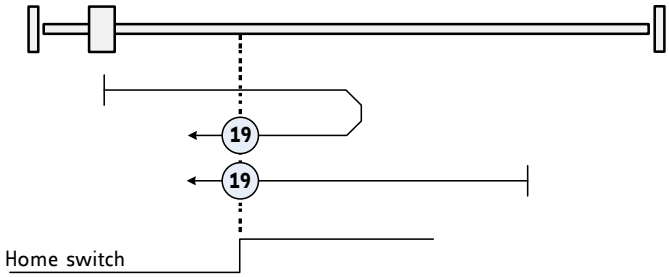

Figure 16: Homing Method 19

8.1.8 Homing Method 21: Homing on negative Home Switch

Using this method, the initial direction of movement shall be dependent on the state of the home switch. The home position shall be at the point where the home switch changes state. If the initial direction of movement leads away from the home switch, the drive shall reverse on encountering the relevant limit switch.

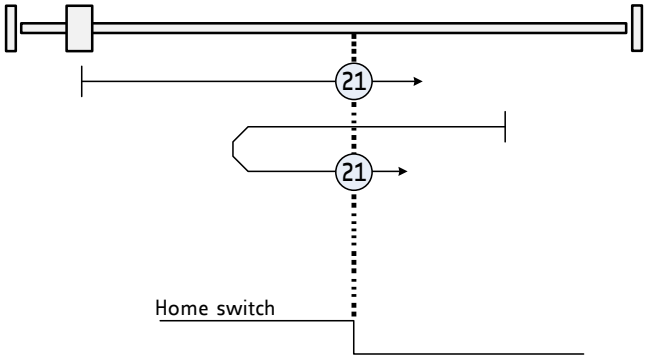

Figure 17: Homing Method 21

8.1.9 Homing Method 33 and 34: Homing on next Index Pulse

Using these methods, the direction of homing is negative or positive respectively. The home position shall be at the index pulse found in the selected direction.

©2020 TRINAMIC Motion Control GmbH & Co. KG, Hamburg, Germany
Terms of delivery and rights to technical change reserved.
Download newest version at www.trinamic.com

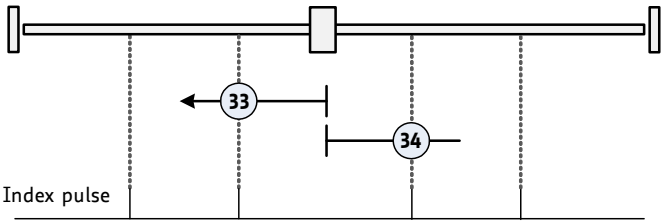

Figure 18: Homing Methods 33 and 34

8.1.10 Homing Method 35: Current Position as Home Position

In this method, the current position shall be taken to be the home position. This method does not require the drive device to be in operation enabled state.

©2020 TRINAMIC Motion Control GmbH & Co. KG, Hamburg, Germany
Terms of delivery and rights to technical change reserved.
Download newest version at www.trinamic.com

8.2 Detailed Object Specifications

8.2.1 Object 6040_h: Control Word

This object indicates the received command controlling the power drive system finite state automaton (PDS FSA). The CiA-402 state machine can be controlled using this object. Please refer to figure 8 for detailed information.

Structure of the Control Word											
15	11	10	9	8	7	6	4	3	2	1	0
nu		r	oms	h	fr	oms		eo	qs	ev	so
MSB											LSB

Legend: nu=not used; r=reserved; oms=operation mode specific; h=halt; fr=fault reset; eo=enable operation; qs=quick stop; ev=enable voltage; so=switch on.

Table 277: Structure of the Control Word in hm Mode

Operation Mode specific Bits in hm Mode		
Bit	Name	Definition
4	Homing operation start	1: start homing; 0: stop homing
8	Halt	Not supported.

Table 278: Operation Mode specific Bits in hm Mode

Command Coding						
Command	Bits of Control Word					Transitions
	Bit 7	Bit 3	Bit 2	Bit 1	Bit 0	
Shutdown	0	x	1	1	0	2,6,8
Switch on	0	0	1	1	1	3
Switch on & enable operation	0	1	1	1	1	3, 4
Disable voltage	0	x	x	0	x	7,9,10,12
Quick stop	0	x	0	1	x	7,10,11
Disable operation	0	0	1	1	1	5
Enable operation	0	1	1	1	1	4, 16
Fault reset	0-to-1	x	x	x	x	15

Table 279: Command Coding

©2020 TRINAMIC Motion Control GmbH & Co. KG, Hamburg, Germany
Terms of delivery and rights to technical change reserved.
Download newest version at www.trinamic.com

Object Description			
Index	Name	Object Type	Data Type
6040_h	Controlword	Variable	UNSIGNED16

Table 280: Object Description (6040_h in hm Mode)

Entry Description				
Sub-index	Access	PDO Mapping	Value Range	Default Value
0	rw	see CiA402-3	See command coding above.	

Table 281: Entry Description (6040_h in hm Mode)

8.2.2 Object 6041_h: Status Word

This object provides the status of the PDS FSA. It reflects the status of the CiA-402 state machine. Please refer to figure 8 for detailed information. The object is structured as defined below.
For more information about the coding please refer to the CANopen Drives and motion control device profile, part 2.

Structure of the Status Word															
15	14	13	12	11	10	9	8	7	6	5	4	3	2	1	0
dir	mot	oms		ila	tr	rm	ms	w	sod	qs	ve	f	oe	so	rtso
MSB															LSB

Legend: nu=not used; r=reserved; oms=operation mode specific; h=halt; fr=fault reset; oe=operation enable; qs=quick stop; ve=voltage enable; so=switch on.

Table 282: Structure of the Status Word in hm Mode

Trinamic Specific Bits		
Bit	Name	Definition
14	Motor activity	0: Motor stands still. 1: Motor rotates.
15	Direction of rotation	This bit shows the direction of rotation.

Table 283: Trinamic Specific Bits

©2020 TRINAMIC Motion Control GmbH & Co. KG, Hamburg, Germany
Terms of delivery and rights to technical change reserved.
Download newest version at www.trinamic.com

Operation Mode specific Bits in hm Mode		
Bit	Name	Definition
10	Target reached	Set when the zero position has been found or homing has been stopped by setting controlword bit 4 to zero.
12	Home attained	Set when zero position has been found.
13	Homing error	Not supported.

Table 284: Operation Mode specific Bits in hm Mode

State Coding	
Status word	FSA state
xxxx xxxx x0xx 0000_h	Not ready to switch on
xxxx xxxx x1xx 0000_h	Switch on disabled
xxxx xxxx x01x 0001_h	Ready to switch on
xxxx xxxx x01x 0011_h	Switched on
xxxx xxxx x01x 0111_h	Operation enabled
xxxx xxxx x00x 0111_h	Quick stop active
xxxx xxxx x0xx 1111_h	Fault reaction active
xxxx xxxx x0xx 1000_h	Fault

Table 285: State Coding

Object Description			
Index	Name	Object Type	Data Type
6041_h	Controlword	Variable	UNSIGNED16

Table 286: Object Description (6041_h in hm Mode)

Entry Description				
Sub-index	Access	PDO Mapping	Value Range	Default Value
0	rw	see CiA402-3	See state coding above.	

Table 287: Entry Description (6041_h in hm Mode)

8.2.3 Object $606C_h$: Velocity Actual Value

This object shows the actual velocity value of the motor. The value is given in internal or user-defined velocity units (depending on object $208C_h$, described in section 4.2.19).

©2020 TRINAMIC Motion Control GmbH & Co. KG, Hamburg, Germany
Terms of delivery and rights to technical change reserved.
Download newest version at www.trinamic.com

Object Description			
Index	Name	Object Type	Data Type
$606C_h$	Velocity Actual Value	Variable	SIGNED32

Table 288: Object Description ($606C_h$)

Entry Description				
Sub-index	Access	PDO Mapping	Value Range	Default Value
0	ro	Refer to CiA402-3	SIGNED32	no

Table 289: Entry Description ($606C_h$)

8.2.4 Object $607C_h$: Home Offset

This object indicates the configured difference between the zero position for the application and the machine home position/home switch (found during homing). While homing, the machine home position is found and once the homing is completed, the zero position is offset from the home position by adding the home offset to the home position. The effect of setting the home position to a non-zero value depends on the selected homing method. The value of this object is given in microsteps. Negative values indicate the opposite direction.

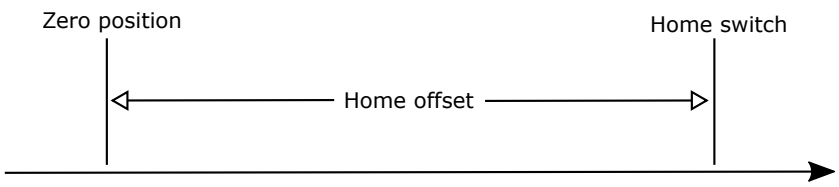

Figure 19: Home Offset

Object Description			
Index	Name	Object Type	Data Type
$607C_h$	Home offset	Variable	SIGNED32

Table 290: Object Description ($607C_h$)

Entry Description				
Sub-index	Access	PDO Mapping	Value Range	Default Value
0	rw	no	SIGNED32	0

Table 291: Entry Description ($607C_h$)

©2020 TRINAMIC Motion Control GmbH & Co. KG, Hamburg, Germany
Terms of delivery and rights to technical change reserved.
Download newest version at www.trinamic.com

8.2.5 Object 6098_h: Homing Method

The homing method to be used can be selected by writing to this object. Please see table 276 for a list of homing methods supported by the current version of the TMCM-1231 CANopen firmware.

Object Description			
Index	Name	Object Type	Data Type
6098_h	Homing method	Variable	SIGNED8

Table 292: Object Description (6098_h)

Entry Description				
Sub-index	Access	PDO Mapping	Value Range	Default Value
0	rw	no	SIGNED8	0

Table 293: Entry Description (6098_h)

8.2.6 Object 6099_h: Homing Speeds

This object indicates the configured speeds used during homing procedure. The values are given in pps units or internal units selectable with object $208C_h$ (section 4.2.19). Using object 6099_h a fast and a slow homing speed can be set. In most homing modes, the home switch is searched with the fast speed first. When the home switch has been found, the motor will be decelerated to the slow speed (using the homing acceleration, object $609A_h$) to search for the exact switch point. When the switch point has been found the motor will be stopped at that point.

Object Description			
Index	Name	Object Type	Data Type
6099_h	Homing speeds	Array	UNSIGNED32

Table 294: Object Description (6099_h)

Entry Description					
Sub-index	Description	Access	PDO Mapping	Value Range	Default Value
1	Fast homing speed	rw	no	UNSIGNED32	0
2	Slow homing speed	rw	no	UNSIGNED32	0

Table 295: Entry Description (6099_h)

8.2.7 Object $609A_h$: Homing Acceleration

This object indicates the configured acceleration and deceleration to be used during homing operation. The value is given in units selected by object $208E_h$ (section 4.2.20).

©2020 TRINAMIC Motion Control GmbH & Co. KG, Hamburg, Germany
Terms of delivery and rights to technical change reserved.
Download newest version at www.trinamic.com

Object Description			
Index	Name	Object Type	Data Type
$609A_h$	Homing acceleration	Variable	UNSIGNED32

Table 296: Object Description ($609A_h$)

Entry Description				
Sub-index	Access	PDO Mapping	Value Range	Default Value
0	rw	no	UNSIGNED32	0

Table 297: Entry Description ($609A_h$)

8.3 How to start a Homing in hm Mode

Here is a little example that shows how to home the motor in hm mode. In this little example we assume that the module has been reset (and then switched to pre-operational or operational) by NMT commands before. The home switch must be connected to the home switch input. It can be operated manually.

- Select hm mode by writing 6 to object 6060_h.
- Write 6 to object 6040_h to switch to READY_TO_SWITCH_ON state.
- Write 7 to object 6040_h to switch to SWITCHED_ON state.
- Write 15 to object 6040_h to switch to OPERATION_ENABLED state.
- Select homing method 19 by writing 19 to object 6098_h.
- Set the homing speeds by writing e.g. 50000 to object 6099_h sub index 1 and e.g. 10000 to object 6099_h sub index 2.
- Write 31 to object 6040_h to start the homing process.
- Press and release the home switch.
- When homing has finished, write 15 to object 6040_h again.

©2020 TRINAMIC Motion Control GmbH & Co. KG, Hamburg, Germany
Terms of delivery and rights to technical change reserved.
Download newest version at www.trinamic.com

9 Cyclic synchronous Position Mode

The cyclic synchronous position mode is used to directly control the position of the motor. It contains limit functions, but not a trajectory generator. The trajectory generator is located in the control device (the master), not in the drive device. In cyclic synchronous manner, the control device provides a target position to the drive device, which performs position control, velocity control and torque control.

The main control parameters are the target position (object $607A_h$, see section 9.1.7) and the interpolation time period (object $60C2_h$, see section 9.1.10). The drive automatically sets the velocity in such a manner that the next target position is reached within the interpolation time period. Acceleration and deceleration ramps are not used in this mode.

The cyclic synchronous position mode covers the following sub-functions:

- Position demand value input directly via an object.
- Monitoring of the position.
- Limiting the position using the software limits or the hardware limit switches.

9.1 Detailed Object Specifications

9.1.1 Object 6040_h: Control Word

This object indicates the received command controlling the power drive system finite state automaton (PDS FSA). The CiA-402 state machine can be controlled using this object. Please refer to figure 8 for detailed information. The cyclic synchronous position mode does not use any mode specific bits of the control word.

Structure of the Control Word								
15 9	8	7	6 4	3	2	1	0
nu	h	fr	nu	eo	qs	ev	so
MSB							LSB

Legend: nu=not used; h=halt; fr=fault reset; eo=enable operation; qs=quick stop; ev=enable voltage; so=switch on.

Table 298: Structure of the Control Word in csp Mode

©2020 TRINAMIC Motion Control GmbH & Co. KG, Hamburg, Germany
Terms of delivery and rights to technical change reserved.
Download newest version at www.trinamic.com

Command Coding						
Command	Bits of Control Word					Transitions
	Bit 7	Bit 3	Bit 2	Bit 1	Bit 0	
Shutdown	0	x	1	1	0	2,6,8
Switch on	0	0	1	1	1	3
Switch on & enable operation	0	1	1	1	1	3, 4
Disable voltage	0	x	x	0	x	7,9,10,12
Quick stop	0	x	0	1	x	7,10,11
Disable operation	0	0	1	1	1	5
Enable operation	0	1	1	1	1	4, 16
Fault reset	0-to-1	x	x	x	x	15

Table 299: Command Coding

Object Description			
Index	Name	Object Type	Data Type
6040_h	Controlword	Variable	UNSIGNED16

Table 300: Object Description (6040_h in csp Mode)

Entry Description				
Sub-index	Access	PDO Mapping	Value Range	Default Value
0	rw	see CiA402-3	See command coding above.	

Table 301: Entry Description (6040_h in csp Mode)

9.1.2 Object 6041_h: Status Word

This object provides the status of the PDS FSA. It reflects the status of the CiA-402 state machine. Please refer to figure 8 for detailed information. The object is structured as defined below.
For more information about the coding please refer to the CANopen Drives and motion control device profile, part 2.

Structure of the Status Word															
15	14	13	12	11	10	9	8	7	6	5	4	3	2	1	0
dir	mot	oms		ila	r	rm	ms	w	sod	qs	ve	f	oe	so	rtso
MSB															LSB

Legend: nu=not used; r=reserved; oms=operation mode specific; h=halt; fr=fault reset; oe=operation enable; qs=quick stop; ve=voltage enable; so=switch on.

Table 302: Structure of the Status Word in csp Mode

©2020 TRINAMIC Motion Control GmbH & Co. KG, Hamburg, Germany
Terms of delivery and rights to technical change reserved.
Download newest version at www.trinamic.com

Trinamic Specific Bits		
Bit	Name	Definition
14	Motor activity	0: Motor stands still. 1: Motor rotates.
15	Direction of rotation	This bit shows the direction of rotation.

Table 303: Trinamic Specific Bits

Operation Mode specific Bits in csp Mode		
Bit	Name	Definition
10	Reserved	Not used.
12	Target position ignored	0: Target position ignored. 1: Target position used as input to position controller.
13	Following error	0: No following error. 1: Following error.

Table 304: Operation Mode specific Bits in csp Mode

State Coding	
Status word	FSA state
xxxx xxxx x0xx 0000_h	Not ready to switch on
xxxx xxxx x1xx 0000_h	Switch on disabled
xxxx xxxx x01x 0001_h	Ready to switch on
xxxx xxxx x01x 0011_h	Switched on
xxxx xxxx x01x 0111_h	Operation enabled
xxxx xxxx x00x 0111_h	Quick stop active
xxxx xxxx x0xx 1111_h	Fault reaction active
xxxx xxxx x0xx 1000_h	Fault

Table 305: State Coding

Object Description			
Index	Name	Object Type	Data Type
6041_h	Controlword	Variable	UNSIGNED16

Table 306: Object Description (6041_h in csp Mode)

©2020 TRINAMIC Motion Control GmbH & Co. KG, Hamburg, Germany
Terms of delivery and rights to technical change reserved.
Download newest version at www.trinamic.com

Entry Description				
Sub-index	Access	PDO Mapping	Value Range	Default Value
0	rw	see CiA402-3	See state coding above	

Table 307: Entry Description (6041_h in csp Mode)

9.1.3 Object 6062_h: Position Demand Value

This object provides the demanded position value. The value is given in microsteps. Object 6062_h indicates the actual position that the motor should have. It is not to be confused with objects 6063_h and 6064_h.

Object Description			
Index	Name	Object Type	Data Type
6062_h	Position Demand Value	Variable	SIGNED32

Table 308: Object Description (6062_h)

Entry Description				
Sub-index	Access	PDO Mapping	Value Range	Default Value
0	ro	Refer to CiA402-3	SIGNED32	no

Table 309: Entry Description (6062_h)

9.1.4 Object 6063_h: Position Actual Internal Value

This object provides the actual value of the encoder or the motor. Please use the sensor selection object $606A_h$ (see section 5.1.8) for selecting the motor or the encoder first. Object 6063_h indicates the actual position of the encoder or the motor, re-scaled to the microstep resolution. The value is given in microsteps.

Object Description			
Index	Name	Object Type	Data Type
6063_h	Position Actual Internal Value	Variable	SIGNED32

Table 310: Object Description (6063_h)

Entry Description				
Sub-index	Access	PDO Mapping	Value Range	Default Value
0	ro	Refer to CiA402-3	SIGNED32	no

Table 311: Entry Description (6063_h)

©2020 TRINAMIC Motion Control GmbH & Co. KG, Hamburg, Germany
Terms of delivery and rights to technical change reserved.
Download newest version at www.trinamic.com

9.1.5 Object 6064_h: Position Actual Value

This object provides the actual value of the position measurement device. It always contains the same value as object 6063_h.

Object Description			
Index	Name	Object Type	Data Type
6064_h	Position Actual Value	Variable	SIGNED32

Table 312: Object Description (6064_h)

Entry Description				
Sub-index	Access	PDO Mapping	Value Range	Default Value
0	ro	Refer to CiA402-3	SIGNED32	no

Table 313: Entry Description (6064_h)

9.1.6 Object $606C_h$: Velocity Actual Value

This object shows the actual velocity value of the motor. The value is given in internal or user-defined velocity units (depending on object $208C_h$, described in section 4.2.19).

Object Description			
Index	Name	Object Type	Data Type
$606C_h$	Velocity Actual Value	Variable	SIGNED32

Table 314: Object Description ($606C_h$)

Entry Description				
Sub-index	Access	PDO Mapping	Value Range	Default Value
0	ro	Refer to CiA402-3	SIGNED32	no

Table 315: Entry Description ($606C_h$)

9.1.7 Object $607A_h$: Target Position

The target position is the position that the drive should move to in cyclic synchronous position mode using the current interpolation time period. In csp mode this value is always interpreted as an absolute value.

Object Description			
Index	Name	Object Type	Data Type
$607A_h$	Target Position	Variable	SIGNED32

Table 316: Object Description ($607A_h$ in csp Mode)

©2020 TRINAMIC Motion Control GmbH & Co. KG, Hamburg, Germany
Terms of delivery and rights to technical change reserved.
Download newest version at www.trinamic.com

Entry Description				
Sub-index	Access	PDO Mapping	Value Range	Default Value
0	rw	Refer to CiA402-3	SIGNED32	0

Table 317: Entry Description ($607A_h$ in csp Mode)

9.1.8 Object $607D_h$: Software Position Limit

This object indicates the configured maximal and minimal software position limits. These parameters define the absolute position limits for the position demand value and the position actual value. Every new target position is checked against these limits. The limit positions are always relative to the machine home position. Before being compared with the target position, they are corrected internally by the home offset as follows:

$$Corrected_min_position_limit = min_position_limit - home_offset$$
$$Corrected_max_position_limit = max_position_limit - home_offset$$

Object Description			
Index	Name	Object Type	Data Type
$607D_h$	Software Position Limit	Array	SIGNED32

Table 318: Object Description ($607D_h$)

Entry Description					
Sub-index	Description	Access	PDO Mapping	Value Range	Default Value
1	Mininmum Position Limit	rw	no	SIGNED32	-2147483648
2	Maximum Position Limit	rw	no	SIGNED32	2147483647

Table 319: Entry Description ($607D_h$)

9.1.9 Object $60B0_h$: Position Offset

This object provides an offset to the target position (object $607A_h$, see section 9.1.7)). The value is given in microsteps and will be added to the target position.

Object Description			
Index	Name	Object Type	Data Type
$60B0_h$	Offset Torque	Variable	SIGNED32

Table 320: Object Description ($60B0_h$)

©2020 TRINAMIC Motion Control GmbH & Co. KG, Hamburg, Germany
Terms of delivery and rights to technical change reserved.
Download newest version at www.trinamic.com

Entry Description				
Sub-index	Access	PDO Mapping	Value Range	Default Value
0	rw	yes	-2147483648…2147483647	0

Table 321: Entry Description ($60B0_h$)

9.1.10 Object $60C2_h$: Interpolation Time Period

This object indicates the interpolation cycle time. The interpolation time period (sub-index 01_h) is given in $10^{interpolation_time_index}$ s. The interpolation time index (sub-index 02_h) is dimensionless.

Object Description			
Index	Name	Object Type	Data Type
$60C2_h$	Offset Torque	Vecord	Interpolation time period record (0080_h)

Table 322: Object Description ($60C2_h$)

Entry Description					
Sub-index	Description	Access	PDO Mapping	Value Range	Default Value
0	Highest sub-index supported	ro	no	UNSIGNED8	2
1	Interpolation time period value	rw	no	UNSIGNED8	1
2	Interpolation time index	rw	no	-3…3	-3

Table 323: Entry Description ($60C2_h$)

©2020 TRINAMIC Motion Control GmbH & Co. KG, Hamburg, Germany
Terms of delivery and rights to technical change reserved.
Download newest version at www.trinamic.com

10 Cyclic synchronous Velocity Mode

The cyclic synchronous velocity mode is used to directly control the velocity of the motor. It contains limit functions, but not a trajectory generator. The trajectory generator is located in the control device (the master), not in the drive device. In cyclic synchronous manner, the control device provides a target velocity to the drive device, which performs position control, velocity control and torque control.

The main control parameters are the target velocity (object $60FF_h$, see section 10.1.4) and the interpolation time period (object $60C2_h$, see section 10.1.7). The drive automatically sets the acceleration in such a manner that the next target velocity is reached within the interpolation time period. Acceleration and deceleration ramps are not used in this mode.

The cyclic synchronous velocity mode covers the following sub-functions:

- Velocity demand value input directly via an object.
- Monitoring of the position.
- Limiting the position using the software limits or the hardware limit switches.

10.1 Detailed Object Specifications

10.1.1 Object 6040_h: Control Word

This object indicates the received command controlling the power drive system finite state automaton (PDS FSA). The CiA-402 state machine can be controlled using this object. Please refer to figure 8 for detailed information. The cyclic synchronous velocity mode does not use any mode specific bits of the control word.

Structure of the Control Word								
15 9	8	7	6 4	3	2	1	0
nu	h	fr	nu	eo	qs	ev	so
MSB							LSB

Legend: nu=not used; h=halt; fr=fault reset; eo=enable operation; qs=quick stop; ev=enable voltage; so=switch on.

Table 324: Structure of the Control Word in csv Mode

©2020 TRINAMIC Motion Control GmbH & Co. KG, Hamburg, Germany
Terms of delivery and rights to technical change reserved.
Download newest version at www.trinamic.com

Command Coding						
Command	Bits of Control Word					Transitions
	Bit 7	Bit 3	Bit 2	Bit 1	Bit 0	
Shutdown	0	x	1	1	0	2,6,8
Switch on	0	0	1	1	1	3
Switch on & enable operation	0	1	1	1	1	3, 4
Disable voltage	0	x	x	0	x	7,9,10,12
Quick stop	0	x	0	1	x	7,10,11
Disable operation	0	0	1	1	1	5
Enable operation	0	1	1	1	1	4, 16
Fault reset	0-to-1	x	x	x	x	15

Table 325: Command Coding

Object Description			
Index	Name	Object Type	Data Type
6040_h	Controlword	Variable	UNSIGNED16

Table 326: Object Description (6040_h in csv Mode)

Entry Description				
Sub-index	Access	PDO Mapping	Value Range	Default Value
0	rw	see CiA402-3	See command coding above.	

Table 327: Entry Description (6040_h in csv Mode)

10.1.2 Object 6041_h: Status Word

This object provides the status of the PDS FSA. It reflects the status of the CiA-402 state machine. Please refer to figure 8 for detailed information. The object is structured as defined below.
For more information about the coding please refer to the CANopen Drives and motion control device profile, part 2.

Structure of the Status Word															
15	14	13	12	11	10	9	8	7	6	5	4	3	2	1	0
dir	mot	oms		ila	r	rm	ms	w	sod	qs	ve	f	oe	so	rtso
MSB															LSB

Legend: nu=not used; r=reserved; oms=operation mode specific; h=halt; fr=fault reset; oe=operation enable; qs=quick stop; ve=voltage enable; so=switch on.

Table 328: Structure of the Status Word in csv Mode

©2020 TRINAMIC Motion Control GmbH & Co. KG, Hamburg, Germany
Terms of delivery and rights to technical change reserved.
Download newest version at www.trinamic.com

Trinamic Specific Bits		
Bit	Name	Definition
14	Motor activity	0: Motor stands still. 1: Motor rotates.
15	Direction of rotation	This bit shows the direction of rotation.

Table 329: Trinamic Specific Bits

Operation Mode specific Bits in csv Mode		
Bit	Name	Definition
10	Reserved	Not used.
12	Target position ignored	0: Target velocity ignored. 1: Target velocity used as input to velocity controller.
13	Reserved	Not used.

Table 330: Operation Mode specific Bits in csv Mode

State Coding	
Status word	FSA state
xxxx xxxx x0xx 0000_h	Not ready to switch on
xxxx xxxx x1xx 0000_h	Switch on disabled
xxxx xxxx x01x 0001_h	Ready to switch on
xxxx xxxx x01x 0011_h	Switched on
xxxx xxxx x01x 0111_h	Operation enabled
xxxx xxxx x00x 0111_h	Quick stop active
xxxx xxxx x0xx 1111_h	Fault reaction active
xxxx xxxx x0xx 1000_h	Fault

Table 331: State Coding

Object Description			
Index	Name	Object Type	Data Type
6041_h	Controlword	Variable	UNSIGNED16

Table 332: Object Description (6041_h in csv Mode)

©2020 TRINAMIC Motion Control GmbH & Co. KG, Hamburg, Germany
Terms of delivery and rights to technical change reserved.
Download newest version at www.trinamic.com

Entry Description				
Sub-index	Access	PDO Mapping	Value Range	Default Value
0	rw	see CiA402-3	See state coding above	

Table 333: Entry Description (6041_h in csv Mode)

10.1.3 Object $606C_h$: Velocity Actual Value

This object shows the actual velocity value of the motor. The value is given in internal or user-defined velocity units (depending on object $208C_h$, described in section 4.2.19).

Object Description			
Index	Name	Object Type	Data Type
$606C_h$	Velocity Actual Value	Variable	SIGNED32

Table 334: Object Description ($606C_h$)

Entry Description				
Sub-index	Access	PDO Mapping	Value Range	Default Value
0	ro	Refer to CiA402-3	SIGNED32	no

Table 335: Entry Description ($606C_h$)

10.1.4 Object $60FF_h$: Target Velocity

In csv mode the target velocity specifies the velocity that is to be reached within the interpolation time period. The values are given in units which can be selected with object $208C_h$, described in section 4.2.19.

Object Description			
Index	Name	Object Type	Data Type
$60FF_h$	Target Velocity	Variable	SIGNED32

Table 336: Object Description ($60FF_h$)

Entry Description				
Sub-index	Access	PDO Mapping	Value Range	Default Value
0	rw	see CiA402-3	SIGNED32	0

Table 337: Entry Description ($60FF_h$)

10.1.5 Object $607D_h$: Software Position Limit

This object indicates the configured maximal and minimal software position limits. These parameters define the absolute position limits for the position demand value and the position actual value. Every

©2020 TRINAMIC Motion Control GmbH & Co. KG, Hamburg, Germany
Terms of delivery and rights to technical change reserved.
Download newest version at www.trinamic.com

new target position is checked against these limits. The limit positions are always relative to the machine home position. Before being compared with the target position, they are corrected internally by the home offset as follows:

$$Corrected_min_position_limit = min_position_limit - home_offset$$
$$Corrected_max_position_limit = max_position_limit - home_offset$$

Object Description			
Index	Name	Object Type	Data Type
$607D_h$	Software Position Limit	Array	SIGNED32

Table 338: Object Description ($607D_h$)

Entry Description					
Sub-index	Description	Access	PDO Mapping	Value Range	Default Value
1	Mininmum Position Limit	rw	no	SIGNED32	-2147483648
2	Maximum Position Limit	rw	no	SIGNED32	2147483647

Table 339: Entry Description ($607D_h$)

10.1.6 Object $60B1_h$: Velocity Offset

This object provides an offset to the target velocity (object $60FF_h$, see section 10.1.4)). The value will be added to the target velocity.

Object Description			
Index	Name	Object Type	Data Type
$60B1_h$	Velocity Offset	Variable	SIGNED32

Table 340: Object Description ($60B1_h$)

Entry Description				
Sub-index	Access	PDO Mapping	Value Range	Default Value
0	rw	yes	-2147483648…2147483647	0

Table 341: Entry Description ($60B1_h$)

10.1.7 Object $60C2_h$: Interpolation Time Period

This object indicates the interpolation cycle time. The interpolation time period (sub-index 01_h) is given in $10^{interpolation_time_index}$ s. The interpolation time index (sub-index 02_h) is dimensionless.

©2020 TRINAMIC Motion Control GmbH & Co. KG, Hamburg, Germany
Terms of delivery and rights to technical change reserved.
Download newest version at www.trinamic.com

Object Description			
Index	Name	Object Type	Data Type
$60C2_h$	Offset Torque	Vecord	Interpolation time period record (0080_h)

Table 342: Object Description ($60C2_h$)

Entry Description					
Sub-index	Description	Access	PDO Mapping	Value Range	Default Value
0	Highest sub-index supported	ro	no	UNSIGNED8	2
1	Interpolation time period value	rw	no	UNSIGNED8	1
2	Interpolation time index	rw	no	-3…3	-3

Table 343: Entry Description ($60C2_h$)

©2020 TRINAMIC Motion Control GmbH & Co. KG, Hamburg, Germany
Terms of delivery and rights to technical change reserved.
Download newest version at www.trinamic.com

11 Emergency Messages (EMCY)

The module sends an emergency message if an error occurs. The message contains information about the error type. The module can map internal errors and object 1001_h (error register) is part of every emergency object.

Emergency Messages (EMCY) of the TMCM-1231						
Error code	Additional byte					Description
	1	2	3	4	5	
0000_h	0	0	0	0	0	**Fault reset** The fault reset command has been executed.
1000_h	1	0	0	0	0	**Generic error: open load bridge A** The motor driver indicates open load on bridge A. It is possible that the motor cable is broken or that there is an error in the power amplifier itself.
1000_h	2	0	0	0	0	**Generic error: open load bridge B** The motor driver indicates open load on bridge B. It is possible that the motor cable is broken or that there is an error in the power amplifier itself.
2310_h	0	0	0	0	0	**Overcurrent high side** The motor driver indicates an overcurrent on the high side. This can be caused by a short circuit in the driver stage.
2311_h	0	0	0	0	0	**Overcurrent bridge B** The motor driver indicates that there is overcurrent on bridge B. This can be caused by a short circuit in the motor itself or in the motor driver stage.
2312_h	0	0	0	0	0	**Overcurrent bridge A** The motor driver indicates that there is overcurrent on bridge A. This can be caused by a short circuit in the motor itself or in the motor driver stage.
3230_h	0	0	0	0	0	**stallGuard2 error** The actual load value exceeds the stallGuard2 limit.
4310_h	1	0	0	0	0	**Overtemperature pre-warning** The temperature in the motor driver exceeds the pre-warning limit.
4310_h	2	0	0	0	0	**Overtemperature error** The motor driver has been switched off because the temperature limit has been exceeded.
5441_h	0	255	0	0	0	**Shutdown switch active** The enable signal is missing (due to the shutdown switch) and the motor driver has been switched off.
6320_h	0	255	0	0	0	**Parameter error** The data in the received PDO is either wrong or cannot be accepted due to the internal state of the drive.
8100_h	0	255	0	0	0	**Communication error** General CAN bus communication error.

©2020 TRINAMIC Motion Control GmbH & Co. KG, Hamburg, Germany
Terms of delivery and rights to technical change reserved.
Download newest version at www.trinamic.com

Error code	Additional byte					Description
	1	2	3	4	5	
8110_h	1	255	0	0	0	**CAN controller overflow** The receive message buffer of the CAN controller hardware is full and some CAN messages are lost.
8110_h	2	255	0	0	0	**CAN Tx buffer overflow** The software CAN transmit buffer is full and thus some CAN messages are lost.
8110_h	3	255	0	0	0	**CAN Rx buffer overflow** The software CAN receive buffer is full and so some CAN messages are lost.
8120_h	0	255	0	0	0	**CAN error passive** The CAN controller has detected communication errors and has entered the CAN Error passive state.
8130_h	0	255	0	0	0	**Heartbeat or lifeguard error** The module did not receive a heartbeat or lifeguard message in time.
8140_h	0	255	0	0	0	**CAN controller recovered from bus-off state** The CAN controller has detected too many errors and has changed into the bus-off state. The drive has been stopped and disabled. This message is sent after the CAN controller has recovered from bus-off state and is bus-on again.
8210_h	0	255	0	0	0	**PDO not processed due to length error** A PDO sent to the module could not be processed because too few bytes were supplied.
8220_h	0	255	0	0	0	**PDO length exceeded** A PDO sent to the module could not be processed because too many bytes were supplied.
8611_h	0	0	0	0	0	**Following error** The deviation between motor position counter and encoder position counter has exceeded the following error window.
$ff00_h$	0	0	0	0	0	**Undervoltage** The supply voltage is too low to drive a motor.
$ff01_h$	1	0	0	0	0	**Positive software limit** The actual position is outside the range defined by object $607d_h$.
$ff01_h$	2	0	0	0	0	**Negative software limit** The actual position is outside the range defined by object $607d_h$.
$ff01_h$	3	0	0	0	0	**Positive limit switch** The positive limit switch has been touched outside of the homing function.
$ff01_h$	4	0	0	0	0	**Negative limit switch** The negative limit switch has been touched outside of the homing function.

©2020 TRINAMIC Motion Control GmbH & Co. KG, Hamburg, Germany
Terms of delivery and rights to technical change reserved.
Download newest version at www.trinamic.com

Error code	Additional byte					Description
	1	2	3	4	5	

Table 344: Emergency Messages (EMCY)

©2020 TRINAMIC Motion Control GmbH & Co. KG, Hamburg, Germany
Terms of delivery and rights to technical change reserved.
Download newest version at www.trinamic.com

12 Figures Index

1 stallGuard2 Load Measurement as a Function of Load 8
2 Energy Efficiency Example with coolStep 9
3 NMT State Machine 12
4 Communication Architecture 13
5 Device Model 14
6 CoolStep Adjustment Points and Thresholds 30
7 Brake Output Timing 33
8 DS402 Finite State Machine 66
9 Homing Mode Function 89
10 Homing Method 1 90
11 Homing Method 2 91
12 Homing Method 3 91
13 Homing Method 5 92
14 Homing Method 17 92
15 Homing Method 18 92
16 Homing Method 19 93
17 Homing Method 21 93
18 Homing Methods 33 and 34 94
19 Home Offset 98

©2020 TRINAMIC Motion Control GmbH & Co. KG, Hamburg, Germany
Terms of delivery and rights to technical change reserved.
Download newest version at www.trinamic.com

13 Tables Index

1 Abbreviations used in this Manual . . 7
2 Service Primitives 10
3 Service Types 11
4 Object Dictionary 14
5 Object Description (1000_h) 16
6 Entry Description (1000_h) 16
7 Object Description (1001_h) 16
8 Entry Description (1001_h) 16
9 Error Register Bits 17
10 Value Definition (1005_h) 17
11 Object Description (1005_h) 17
12 Entry Description (1005_h) 17
13 Object Description (1008_h) 18
14 Entry Description (1008_h) 18
15 Object Description (1009_h) 18
16 Entry Description (1009_h) 18
17 Object Description ($100A_h$) 18
18 Entry Description ($100A_h$) 19
19 Object Description ($100C_h$) 19
20 Entry Description ($100C_h$) 19
21 Object Description ($100D_h$) 19
22 Entry Description ($100D_h$) 19
23 Save Signature 20
24 Object Description (1010_h) 20
25 Entry Description (1010_h) 20
26 Load Signature 21
27 Object Description (1011_h) 21
28 Entry Description (1011_h) 22
29 Object Description (1014_h) 22
30 Entry Description (1014_h) 22
31 Object Description (1015_h) 22
32 Entry Description (1015_h) 22
33 Value Definition (1016_h) 23
34 Object Description (1016_h) 23
35 Entry Description (1016_h) 23
36 Object Description (1017_h) 23
37 Entry Description (1017_h) 24
38 Object Description (1018_h) 24
39 Entry Description (1018_h) 24
40 Object Description (1029_h) 25
41 Entry Description (1029_h) 25
42 Object Description (1400_h) 25
43 Entry Description (1400_h) 26
44 Object Description (1600_h) 26
45 Entry Description (1600_h) 27
46 Object Description (1800_h) 28
47 Entry Description (1800_h) 28
48 Object Description ($1A00_h$) 29
49 Entry Description ($1A00_h$) 29
50 CoolStep related Objects 31
51 Object Description (2000_h) 32
52 Entry Description (2000_h) 32
53 Object Description (2001_h) 32
54 Entry Description (2001_h) 32
55 Object Description (2002_h) 33
56 Entry Description (2002_h) 33
57 Object Description (2003_h) 33
58 Entry Description (2003_h) 33
59 Object Description (2004_h) 34
60 Entry Description (2004_h) 34
61 Object Description (2005_h) 34
62 Entry Description (2005_h) 34
63 Bit Definitions (2005_h) 35
64 Object Description ($200A_h$) 35
65 Entry Description $(200A)_h$ 35
66 Object Description ($200B_h$) 35
67 Entry Description ($200B_h$) 36
68 Object Description ($200C_h$) 36
69 Entry Description ($200C_h$) 36
70 Object Description ($200F_h$) 36
71 Entry Description ($200F_h$) 37
72 Object Description (2010_h) 37
73 Entry Description (2010_h) 37
74 Object Description (2011_h) 37
75 Entry Description (2011_h) 37
76 Object Description (2012_h) 38
77 Entry Description (2012_h) 38
78 Object Description (2013_h) 38
79 Entry Description (2013_h) 38
80 Object Description (2014_h) 38
81 Entry Description (2014_h) 39
82 Object Description (2015_h) 39
83 Entry Description (2015_h) 39
84 Object Description ($204E_h$) 39
85 Entry Description ($204E_h$) 39
86 Object Description (2089_h) 40
87 Entry Description (2089_h) 40
88 Object Description ($208C_h$) 40
89 Entry Description ($208C_h$) 40
90 Object Description ($208E_h$) 41
91 Entry Description ($208E_h$) 41
92 Object Description (2092_h) 41
93 Entry Description (2092_h) 41
94 Object Description (2093_h) 41
95 Entry Description (2093_h) 42
96 Object Description (2094_h) 42
97 Entry Description (2094_h) 42
98 Object Description (2095_h) 42
99 Entry Description (2095_h) 43
100 Object Description (2096_h) 43
101 Entry Description (2096_h) 43
102 Object Description (2097_h) 43
103 Entry Description (2097_h) 43
104 Object Description (2098_h) 44

©2020 TRINAMIC Motion Control GmbH & Co. KG, Hamburg, Germany
Terms of delivery and rights to technical change reserved.
Download newest version at www.trinamic.com

105 Entry Description (2098_h) 44
106 Object Description (2099_h) 44
107 Entry Description (2099_h) 44
108 Object Description ($209A_h$) 45
109 Entry Description ($209A_h$) 45
110 Object Description ($209B_h$) 45
111 Entry Description ($209B_h$) 45
112 Object Description ($209C_h$) 46
113 Entry Description ($209C_h$) 46
114 Object Description ($209D_h$) 46
115 Entry Description ($209D_h$) 46
116 Object Description ($209E_h$) 47
117 Entry Description ($209E_h$) 47
118 Object Description ($20A1_h$) 47
119 Entry Description ($20A1_h$) 47
120 Object Description ($20A4_h$) 48
121 Entry Description ($20A4_h$) 48
122 Object Description ($20A5_h$) 48
123 Entry Description ($20A5_h$) 48
124 Object Description ($20B0_h$) 48
125 Entry Description ($20B0_h$) 49
126 Object Description ($20B1_h$) 49
127 Entry Description ($20B1_h$) 49
128 Object Description ($20B2_h$) 49
129 Entry Description ($20B2_h$) 49
130 Object Description (2100_h) 50
131 Entry Description (2100_h) 50
132 Object Description (2101_h) 50
133 Entry Description (2101_h) 50
134 Driver Error Flags (2102_h) 51
135 Object Description (2102_h) 51
136 Entry Description (2102_h) 51
137 Object Description (2107_h) 51
138 Entry Description (2107_h) 52
139 Object Description (2700_h) 52
140 Entry Description $(2700)_h$ 52
141 Object Description (2701_h) 52
142 Entry Description $(2701)_h$ 53
143 Bit Definitions (2702_h) 53
144 Object Description (2702_h) 53
145 Entry Description $(2702)_h$ 53
146 Bit Definitions (2703_h) 54
147 Object Description (2703_h) 54
148 Entry Description (2703_h) 54
149 Object Description (2704_h) 54
150 Entry Description $(2704)_h$ 55
151 Object Description (2705_h) 55
152 Entry Description $(2705)_h$ 55
153 Object Description (2706_h) 56
154 Entry Description $(2706)_h$ 56
155 Object Description (2707_h) 56
156 Entry Description $(2707)_h$ 56
157 Object Description (2708_h) 56
158 Entry Description (2708_h) 57
159 Object Description ($270E_h$) 57
160 Entry Description ($270E_h$) 57
161 Object Description ($5FFF_h$) 57
162 Entry Description ($5FFF_h$) 57
163 Value Description ($605A_h$) 58
164 Object Description ($605A_h$) 58
165 Entry Description ($605A_h$) 59
166 Value Description ($605B_h$) 59
167 Object Description ($605B_h$) 59
168 Entry Description ($605B_h$) 59
169 Value Description ($605C_h$) 59
170 Object Description ($605C_h$) 60
171 Entry Description ($605C_h$) 60
172 Value Description ($605D_h$) 60
173 Object Description ($605D_h$) 60
174 Entry Description ($605D_h$) 60
175 Value Description ($605E_h$) 61
176 Object Description ($605E_h$) 61
177 Entry Description ($605E_h$) 61
178 Value Description (6060_h) 61
179 Object Description (6060_h) 62
180 Entry Description (6060_h) 62
181 Value Description (6061_h) 62
182 Object Description (6061_h) 62
183 Entry Description (6061_h) 63
184 Value Description ($606A_h$) 63
185 Object Description ($606A_h$) 63
186 Entry Description ($606A_h$) 63
187 Object Description ($608F_h$) 64
188 Entry Description ($608F_h$) 64
189 Object Description ($60FD_h$) 64
190 Entry Description ($60FD_h$) 64
191 Value Definition (6502_h) 65
192 Object Description (6502_h) 65
193 Entry Description (6502_h) 65
194 Structure of the Control Word in pp Mode 67
195 Operation Mode specific Bits in pp Mode 67
196 Command Coding 67
197 Object Description (6040_h in pp Mode) 68
198 Entry Description (6040_h in pp Mode) 68
199 Structure of the Staus Word in pp Mode 68
200 Trinamic Specific Bits 68
201 Operation Mode specific Bits in pp Mode 69
202 State Coding 69
203 Object Description (6041_h in pp Mode) 69
204 Entry Description (6041_h in pp Mode) 69
205 Object Description (6062_h) 70
206 Entry Description (6062_h) 70
207 Object Description (6063_h) 70
208 Entry Description (6063_h) 70
209 Object Description (6064_h) 70

©2020 TRINAMIC Motion Control GmbH & Co. KG, Hamburg, Germany
Terms of delivery and rights to technical change reserved.
Download newest version at www.trinamic.com

210 Entry Description (6064_h) 71
211 Object Description (6065_h) 71
212 Entry Description (6065_h) 71
213 Object Description (6067_h) 72
214 Entry Description (6067_h) 72
215 Object Description (6068_h) 72
216 Entry Description (6068_h) 72
217 Object Description ($606C_h$) 72
218 Entry Description ($606C_h$) 73
219 Object Description ($607A_h$ in pp Mode) 73
220 Entry Description ($607A_h$ in pp Mode) 73
221 Object Description ($607D_h$) 73
222 Entry Description ($607D_h$) 74
223 Object Description (6081_h) 74
224 Entry Description (6081_h) 74
225 Object Description (6082_h) 74
226 Entry Description (6082_h) 74
227 Object Description (6083_h) 75
228 Entry Description (6083_h) 75
229 Object Description (6084_h) 75
230 Entry Description (6084_h) 75
231 Object Description (6085_h) 76
232 Entry Description (6085_h) 76
233 Value Definitions of Object 6086_h . . . 76
234 Object Description (6086_h) 76
235 Entry Description (6086_h) 76
236 Object Description ($60A4_h$) 77
237 Entry Description ($60A4_h$) 77
238 Bit Definitions of Object $60F2_h$ 77
239 Object Description ($60F2_h$) 78
240 Entry Description ($60F2_h$) 78
241 Structure of the Control Word in pv Mode 79
242 Command Coding 80
243 Object Description (6040_h in pv Mode) 80
244 Entry Description (6040_h in pv Mode) 80
245 Structure of the Status Word in pv Mode 80
246 Trinamic Specific Bits 81
247 Operation Mode specific Bits in pv Mode 81
248 State Coding 81
249 Object Description (6041_h in pv Mode) 81
250 Entry Description (6041_h in pv Mode) 82
251 Object Description (6062_h) 82
252 Entry Description (6062_h) 82
253 Object Description (6063_h) 82
254 Entry Description (6063_h) 82
255 Object Description (6064_h) 83
256 Entry Description (6064_h) 83
257 Object Description (6065_h) 83
258 Entry Description (6065_h) 83
259 Object Description ($606C_h$) 84
260 Entry Description ($606C_h$) 84
261 Object Description ($607D_h$) 84
262 Entry Description ($607D_h$) 84
263 Object Description (6083_h) 85
264 Entry Description (6083_h) 85
265 Object Description (6084_h) 85
266 Entry Description (6084_h) 85
267 Object Description (6085_h) 86
268 Entry Description (6085_h) 86
269 Value Definitions of Object 6086_h . . . 86
270 Object Description (6086_h) 86
271 Entry Description (6086_h) 86
272 Object Description ($60A4_h$) 87
273 Entry Description ($60A4_h$) 87
274 Object Description ($60FF_h$) 87
275 Entry Description ($60FF_h$) 87
276 Supported CANopen Homing Methods 90
277 Structure of the Control Word in hm Mode 95
278 Operation Mode specific Bits in hm Mode 95
279 Command Coding 95
280 Object Description (6040_h in hm Mode) 96
281 Entry Description (6040_h in hm Mode) 96
282 Structure of the Status Word in hm Mode 96
283 Trinamic Specific Bits 96
284 Operation Mode specific Bits in hm Mode 97
285 State Coding 97
286 Object Description (6041_h in hm Mode) 97
287 Entry Description (6041_h in hm Mode) 97
288 Object Description ($606C_h$) 98
289 Entry Description ($606C_h$) 98
290 Object Description ($607C_h$) 98
291 Entry Description ($607C_h$) 98
292 Object Description (6098_h) 99
293 Entry Description (6098_h) 99
294 Object Description (6099_h) 99
295 Entry Description (6099_h) 99
296 Object Description ($609A_h$) 100
297 Entry Description ($609A_h$) 100
298 Structure of the Control Word in csp Mode 101
299 Command Coding 102
300 Object Description (6040_h in csp Mode) 102
301 Entry Description (6040_h in csp Mode) 102
302 Structure of the Status Word in csp Mode 102
303 Trinamic Specific Bits 103
304 Operation Mode specific Bits in csp Mode 103
305 State Coding 103
306 Object Description (6041_h in csp Mode) 103
307 Entry Description (6041_h in csp Mode) 104

©2020 TRINAMIC Motion Control GmbH & Co. KG, Hamburg, Germany
Terms of delivery and rights to technical change reserved.
Download newest version at www.trinamic.com

308 Object Description (6062_h) 104
309 Entry Description (6062_h) 104
310 Object Description (6063_h) 104
311 Entry Description (6063_h) 104
312 Object Description (6064_h) 105
313 Entry Description (6064_h) 105
314 Object Description ($606C_h$) 105
315 Entry Description ($606C_h$) 105
316 Object Description ($607A_h$ in csp Mode) 105
317 Entry Description ($607A_h$ in csp Mode) 106
318 Object Description ($607D_h$) 106
319 Entry Description ($607D_h$) 106
320 Object Description ($60B0_h$) 106
321 Entry Description ($60B0_h$) 107
322 Object Description ($60C2_h$) 107
323 Entry Description ($60C2_h$) 107
324 Structure of the Control Word in csv Mode 108
325 Command Coding 109
326 Object Description (6040_h in csv Mode) 109
327 Entry Description (6040_h in csv Mode) 109
328 Structure of the Status Word in csv Mode 109
329 Trinamic Specific Bits 110
330 Operation Mode specific Bits in csv Mode 110
331 State Coding 110
332 Object Description (6041_h in csv Mode) 110
333 Entry Description (6041_h in csv Mode) 111
334 Object Description ($606C_h$) 111
335 Entry Description ($606C_h$) 111
336 Object Description ($60FF_h$) 111
337 Entry Description ($60FF_h$) 111
338 Object Description ($607D_h$) 112
339 Entry Description ($607D_h$) 112
340 Object Description ($60B1_h$) 112
341 Entry Description ($60B1_h$) 112
342 Object Description ($60C2_h$) 113
343 Entry Description ($60C2_h$) 113
344 Emergency Messages (EMCY) 116
345 Firmware Revision 124
346 Document Revision 124

©2020 TRINAMIC Motion Control GmbH & Co. KG, Hamburg, Germany
Terms of delivery and rights to technical change reserved.
Download newest version at www.trinamic.com

14 Supplemental Directives

14.1 Producer Information

14.2 Copyright

TRINAMIC owns the content of this user manual in its entirety, including but not limited to pictures, logos, trademarks, and resources. © Copyright 2020 TRINAMIC. All rights reserved. Electronically published by TRINAMIC, Germany.

Redistributions of source or derived format (for example, Portable Document Format or Hypertext Markup Language) must retain the above copyright notice, and the complete Datasheet User Manual documentation of this product including associated Application Notes; and a reference to other available product-related documentation.

14.3 Trademark Designations and Symbols

Trademark designations and symbols used in this documentation indicate that a product or feature is owned and registered as trademark and/or patent either by TRINAMIC or by other manufacturers, whose products are used or referred to in combination with TRINAMIC's products and TRINAMIC's product documentation.

This CANopen® Firmware Manual is a non-commercial publication that seeks to provide concise scientific and technical user information to the target user. Thus, trademark designations and symbols are only entered in the Short Spec of this document that introduces the product at a quick glance. The trademark designation /symbol is also entered when the product or feature name occurs for the first time in the document. All trademarks and brand names used are property of their respective owners.

14.4 Target User

The documentation provided here, is for programmers and engineers only, who are equipped with the necessary skills and have been trained to work with this type of product.

The Target User knows how to responsibly make use of this product without causing harm to himself or others, and without causing damage to systems or devices, in which the user incorporates the product.

14.5 Disclaimer: Life Support Systems

TRINAMIC Motion Control GmbH & Co. KG does not authorize or warrant any of its products for use in life support systems, without the specific written consent of TRINAMIC Motion Control GmbH & Co. KG.

Life support systems are equipment intended to support or sustain life, and whose failure to perform, when properly used in accordance with instructions provided, can be reasonably expected to result in personal injury or death.

Information given in this document is believed to be accurate and reliable. However, no responsibility is assumed for the consequences of its use nor for any infringement of patents or other rights of third parties which may result from its use. Specifications are subject to change without notice.

14.6 Disclaimer: Intended Use

The data specified in this user manual is intended solely for the purpose of product description. No representations or warranties, either express or implied, of merchantability, fitness for a particular purpose

or of any other nature are made hereunder with respect to information/specification or the products to which information refers and no guarantee with respect to compliance to the intended use is given.

In particular, this also applies to the stated possible applications or areas of applications of the product. TRINAMIC products are not designed for and must not be used in connection with any applications where the failure of such products would reasonably be expected to result in significant personal injury or death (safety-Critical Applications) without TRINAMIC's specific written consent.

TRINAMIC products are not designed nor intended for use in military or aerospace applications or environments or in automotive applications unless specifically designated for such use by TRINAMIC. TRINAMIC conveys no patent, copyright, mask work right or other trade mark right to this product. TRINAMIC assumes no liability for any patent and/or other trade mark rights of a third party resulting from processing or handling of the product and/or any other use of the product.

14.7 Collateral Documents & Tools

This product documentation is related and/or associated with additional tool kits, firmware and other items, as provided on the product page at: www.trinamic.com.

©2020 TRINAMIC Motion Control GmbH & Co. KG, Hamburg, Germany
Terms of delivery and rights to technical change reserved.
Download newest version at www.trinamic.com

15 Revision History

15.1 Firmware Revision

Version	Date	Author	Description
V3.25	2020-AUG-25	OK	First release.

Table 345: Firmware Revision

15.2 Document Revision

Version	Date	Author	Description
V1.00	2020-AUG-25	OK	First release.

Table 346: Document Revision

©2020 TRINAMIC Motion Control GmbH & Co. KG, Hamburg, Germany
Terms of delivery and rights to technical change reserved.
Download newest version at www.trinamic.com